# "SPECIAL PERMIT"
# SITE DEVELOPMENT PLAN
## OF
## 6 HILL STREET
## NORFOLK, MASSACHUSETTS
### JUNE 19, 2019

APPROVED BY THE TOWN OF NORFOLK PLANNING BOARD.
DATE :.....

.....

.....

.....

.....

.....

.....

I CERTIFY THAT 20 DAYS HAVE PASSED SINCE PLANNING BOARD APPROVAL AND NO APPEAL HAS BEEN FIELD IN THE OFFICE.

DATE: .....

.....
TOWN CLERK OF NORFOLK

## SHEET INDEX


1. COVER SHEET
2. EXISTING CONDITIONS PLAN
3. BUILDING LAYOUT AND UTILITY PLAN
4. EROSION CONTROL AND GRADING PLAN
5. LIGHTING PLAN
6. LANDSCAPING AND PARKING PLAN
7. CONSTRUCTION DETAILS
8. CONSTRUCTION DETAILS
9. CONSTRUCTION DETAILS


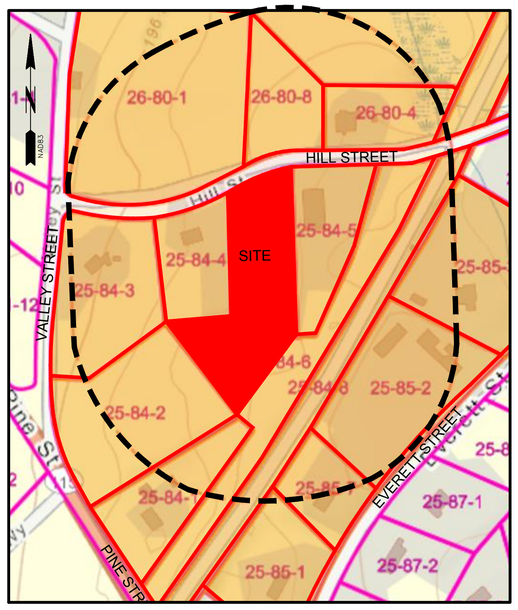


*ABUTTERS WITHIN 300 FEET OF SITE*

*SCALE : 1" - 200'*

*SITE LOCUS & ZONING MAP*

*SCALE : 1" - 1000'*

ZONING TABLE

USE: COMMERCIAL SERVICES

| ZONING: COMMERCIAL C–1d | INTENSITY REGULATION | EXISTING | PROPOSED |
|---|---|---|---|
| FRONT YARD SET BACK (MIN) | 40 Ft | 51.8 FT ± | N/A |
| LOT SIZE (MIN) | 30,000 S.F. | 63,871 SF ± | N/A |
| LOT COVERAGE (MAX) | 60 PERCENT | 45.8 PERCENT | 57.8 PERCENT |
| SIDE YARD SETBACKS (MIN) | 25 Ft | 25.5 FT ± | N/A |
| LOT FRONTAGE (MIN) | 100 Ft | 158.4 FT ± | N/A |
| REAR YARD SETBACKS (MIN) | 25 Ft | 54.0 FT ± | N/A |

LOT COVERAGE CALCULATIONS:

ROOF AREA = 9,145 S.F.
PAVEMENT / IMPERVIOUS AREA = 27,780 S.F.
TOTAL IMPERVIOUS AREA = 36,925 S.F. (57.8% LOT COVERAGE)
(TOTAL IMPERVIOUS AREA / LOT AREA) X 100 = % LOT COVERAGE
(36,925 S.F. / 63,871 S.F.) X 100 = 57.8 % LOT COVERAGE

ZONING REFERENCE: COMMERCIAL C-1d

ASSESSOR'S REFERENCE: ASSESSOR'S MAP 25, BLOCK 84, LOT 7

DEED REFERENCE: BOOK 36295 , PAGE 317 RECORDED IN THE NORFOLK COUNTY REGISTRY OF DEEDS.

PLAN REFERENCE: PLAN NO. 608 OF 1976 IN PLAN BOOK 256 FILED IN THE NORFOLK COUNTY REGISTRY OF DEEDS.
PLAN NO. 760 OF 1954,BOOK 3265 PAGE 585 FILED IN THE NORFOLK COUNTY REGISTRY OF DEEDS.

APPLICANT: HE PROPERTIES, LLC.
6 HILL STREET
NORFOLK, MA 02056

OWNER: HE PROPERTIES, LLC.
6 HILL STREET
NORFOLK, MA 02056

NOTES:

1. SUBSURFACE UTILITIES ARE NOT SHOWN. CALL DIG-SAFE AT 1-888-344-7233 PRIOR TO ANY EXCAVATION.
2. TOPOGRAPHIC SURVEY BY TILTON & ASSOCIATES, INC. PERFORMED FROM 11/27/2018-3/25/2019 , SOIL TESTING ALSO PERFORMED BY TILTON & ASSOCIATES, INC. ON MARCH 21,2019.
3. ELEVATIONS BASED UPON THE NORTH AMERICAN VERTICAL DATUM OF 1988.
4. SITE LOCATED IN ZONE X OF THE FEDERAL EMERGENCY MANAGEMENT AGENCY(FEMA) OF THE TOWN OF NORFOLK COMMUNITY PANEL NO. 25021C0333E OF 255217 MAP EFFECTIVE 7/17/2012.
5. UTILITY SITE SERVICES
   - TELEPHONE, CABLE AND ELECTRIC
   - DRAINAGE

PLANNING BOARD WAIVERS REQUESTED

SECTION - 3.3.2.21. - IMPACT STUDIES AND ASSESSMENTS
REQUEST - TO NOT SUBMIT AND IMPACT STUDY AND ASSESSMENT.

SECTION - 5.2.8. - SLANT SLOPED GRANITE CURBING
REQUEST - TO ALLOW CAPE CODE BERM AND BITUMINOUS BERM CURBING IN LIEU OF SLOPED GRANITE.

SECTION - 5.3.3.1. - CATCH BASINS
REQUEST - TO ALLOW A CATCH BASIN WITH A 4 FOOT INSIDE DIAMETER AND GUTTER INLET.

SECTION - 7.4.2 SCALE
REQUEST - TO ALLOW SITE PLAN AT A SCALE OF 30' TO THE INCH.

SECTION - 7.4.3.7 - NORTH GEODETIC VERTICAL DATUM OF 1929 (N.G.V.D. 1929)
REQUEST - TO ALLOW SITE PLANS ON NATIONAL AMERICAN VERTICAL DATUM OF 1988 (N.A.V.D. 1988)

SECTION - 7.5.2 - TRAFFIC STUDY
REQUEST - TO NOT REQUIRE A TRAFFIC STUDY FOR THIS PROJECT.

SECTION - 8.5.4.12 - SIDEWALKS ON EXISTING ROADWAYS
REQUEST - TO WAIVE THE CONSTRUCTION OF A SIDEWALK ALONG EXISTING ROADWAY.

CERTIFICATIONS:

1. CODE OF MASSACHUSETTS REGULATIONS 250 CMR 6.02
   THIS SURVEY AND PLAN WAS PREPARED BY PHOTOGRAMMETRIC, THEODOLITE AND ELECTRONIC DISTANCE METER METHODS IN ACCORDANCE WITH PROCEDURAL AND TECHNICAL STANDARDS FOR THE PRACTICE OF LAND SURVEYING IN THE COMMONWEALTH OF MASSACHUSETTS.
2. CONTOURS ARE SHOWN AT A ONE (1) FOOT INTERVALS. DATUM IS NAVD88.

.....
PROFESSIONAL LAND SURVEYOR DATE


COPYRIGHT TILTON & ASSOCIATES, INC. 2019, ALL RIGHTS RESERVED. PLANS ARE NOT TO BE COPIED OR ELECTRONICALLY TRANSFERRED WITHOUT THE PERMISSION OF TILTON & ASSOCIATES, INC.


COMMONWEALTH OF MASSACHUSETTS
DALE MACKENZIE JOHNSON
CIVIL
NO. 34575
REGISTERED PROFESSIONAL ENGINEER

COMMONWEALTH OF MASSACHUSETTS
LARRY E. TILTON
No. 37266
REGISTERED PROFESSIONAL LAND SURVEYOR


TILTON AND ASSOCIATES, INC.
81 John L. Dietsch Boulevard
P.O. Box 467
North Attleborough, MA 02761
Tel: (508)699-4120 Fax: (508)699-7810
Web: www.tilton-assoc.com Email: dwgs@tilton-assoc.com
LAND SURVEYING, CIVIL ENGINEERING AND ENVIRONMENTAL PERMITTING


*REVISIONS:*
6–25–2019 – ADJUSTMENTS BASED ON STORMWATER DESIGN
8–5–2019 BETA PEER REVIEW LETTER AND MEETING WITH TOWN PLANNER
8–28–2019 PER BETA REVIEW LETTER
9–26–2019 PER BETA REVIEW LETTER
12–11–2019 PER PLANNING BOARD 10–8–2019 MEETING COMMENTS




G:\Projects\3239\DWGS\PLANSET FOR PLANNING BOARD SUBMISSION 6-25-19\FINAL SET DRAWINGS 12-11-19\3239-SHT 1-6-Special Permit12-11-2019.DWG, 12/11/2019 4:14:46 PM, DWG To PDF.pc3

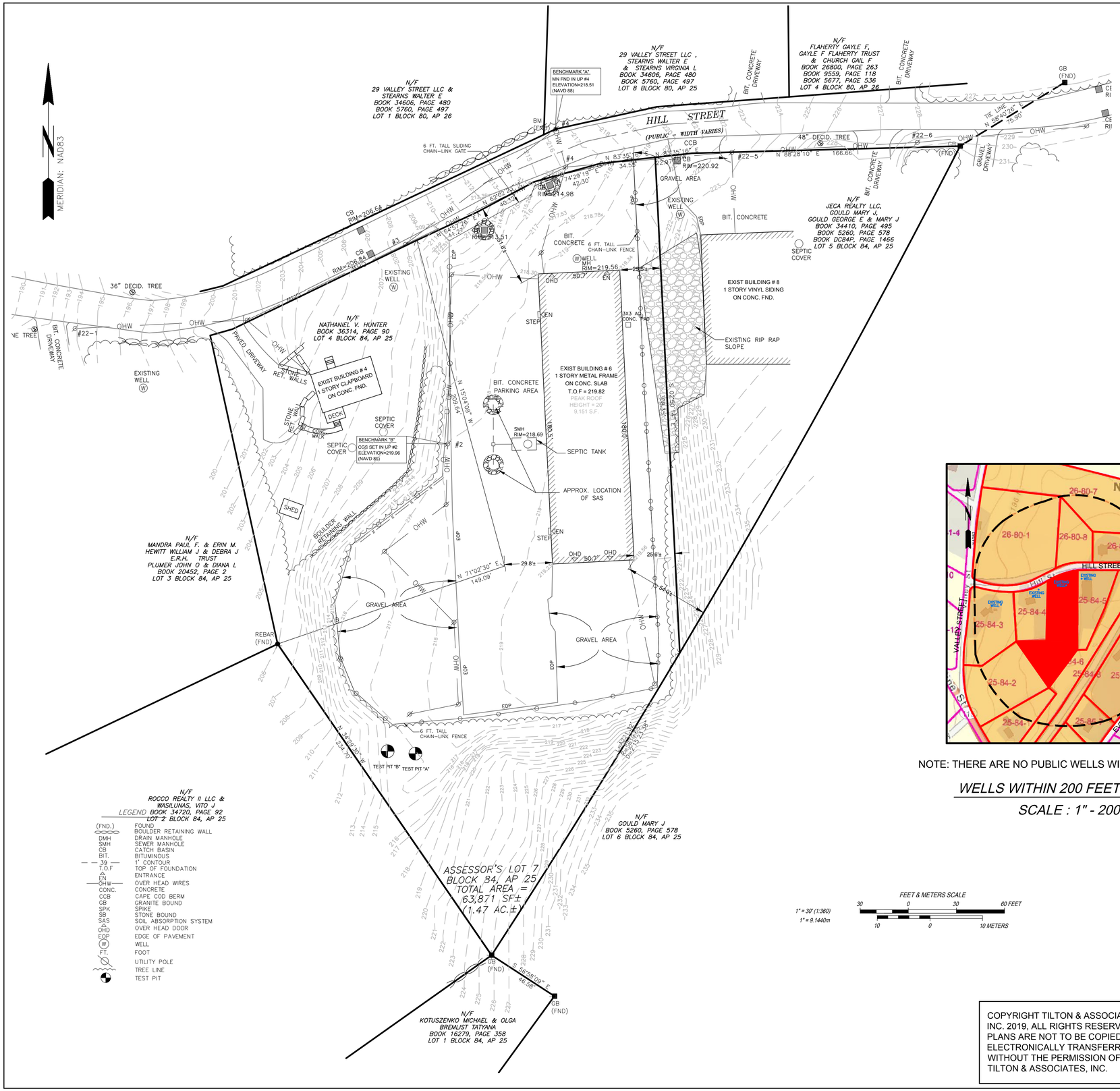


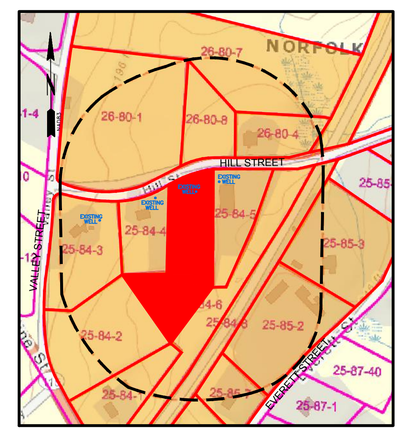


NOTE: THERE ARE NO PUBLIC WELLS WITHIN 1,000 FT. OF THE SITE

*WELLS WITHIN 200 FEET OF SITE*

*SCALE : 1" - 200'*

*FEET & METERS SCALE*

*1" = 30' (1:360)* — 30 0 30 60 FEET

*1" = 9.1440m* — 10 0 10 METERS

APPROVED BY THE TOWN OF NORFOLK PLANNING BOARD.

DATE ;.....

.....

.....

.....

.....

.....

.....

I CERTIFY THAT 20 DAYS HAVE PASSED SINCE PLANNING BOARD APPROVAL AND NO APPEAL HAS BEEN FIELD IN THE OFFICE.

DATE: .....

.....

TOWN CLERK OF NORFOLK

| | |
|---|---|
| ZONING REFERENCE: | COMMERCIAL C-1d |
| ASSESSOR'S REFERENCE: | ASSESSOR'S MAP 25, BLOCK 84, LOT 7 |
| DEED REFERENCE: | BOOK 36295 , PAGE 317 RECORDED IN THE NORFOLK COUNTY REGISTRY OF DEEDS. |
| PLAN REFERENCE: | PLAN NO. 608 OF 1976 IN PLAN BOOK 256 FILED IN THE NORFOLK COUNTY REGISTRY OF DEEDS. PLAN NO. 760 OF 1954,BOOK 3265 PAGE 585 FILED IN THE NORFOLK COUNTY REGISTRY OF DEEDS. |
| APPLICANT: | HE PROPERTIES, LLC. 6 HILL STREET, NORFOLK, NORFOLK, MA 02056 |
| OWNER: | HE PROPERTIES, LLC. 6 HILL STREET, NORFOLK, NORFOLK, MA 02056 |

CERTIFICATIONS:

1. CODE OF MASSACHUSETTS REGULATIONS 250 CMR 6.02
   THIS SURVEY AND PLAN WAS PREPARED BY PHOTOGRAMMETRIC, THEODOLITE AND ELECTRONIC DISTANCE METER METHODS IN ACCORDANCE WITH PROCEDURAL AND TECHNICAL STANDARDS FOR THE PRACTICE OF LAND SURVEYING IN THE COMMONWEALTH OF MASSACHUSETTS.
2. CONTOURS ARE SHOWN AT A ONE (1) FOOT INTERVALS. DATUM IS NAVD88.

.....

PROFESSIONAL LAND SURVEYOR DATE

# *EXISTING CONDITIONS PLAN FOR 6 HILL STREET*

*IN*

*NORFOLK , MASSACHUSETTS*

*PREPARED FOR*

*HE PROPERTIES, LLC.*

*6 HILL STREET*

*NORFOLK, MASSACHUSETTS 02056*

*SCALE: 1" = 30'* *DRAWN BY: RLW* *JOB NO. 3239*

*DATE: JUNE 19, 2019* *CHECKED BY: THL, LET* *DWG. NO. 1*

COPYRIGHT TILTON & ASSOCIATES, INC. 2019, ALL RIGHTS RESERVED. PLANS ARE NOT TO BE COPIED OR ELECTRONICALLY TRANSFERRED WITHOUT THE PERMISSION OF TILTON & ASSOCIATES, INC.

COMMONWEALTH OF MASSACHUSETTS — DALE MACCONNON — CIVIL — No. 34575 — REGISTERED PROFESSIONAL ENGINEER

COMMONWEALTH OF MASSACHUSETTS — LARRY E. TILTON — No. 24046 — REGISTERED PROFESSIONAL LAND SURVEYOR

TILTON AND ASSOCIATES, INC.
81 John L. Dietsch Boulevard
P.O. Box 467
North Attleborough, MA 02761
Tel: (508)699-4120 Fax: (508)699-7810
Web: www.tilton-assoc.com Email: dwgs@tilton-assoc.com
LAND SURVEYING, CIVIL ENGINEERING AND ENVIRONMENTAL PERMITTING

*REVISIONS:*

6-25-2019 – ADJUSTMENTS BASED ON STORMWATER DESIGN
8-5-2019 BETA PEER REVIEW LETTER AND MEETING WITH TOWN PLANNER
8-26-2019 PER BETA REVIEW LETTER
9-26-2019 PER BETA REVIEW LETTER
12-11-2019 PER PLANNING BOARD 10-8-2019 MEETING COMMENTS



G:\Projects\3239\DWGS\PLANSET FOR PLANNING BOARD SUBMISSION 6-25-19\FINAL SET DRAWINGS 12-11-19\3239.SHT 1-6-Special Permit12-11-2019.DWG, 12/11/2019 3:22:49 PM, DWG To PDF.pc3

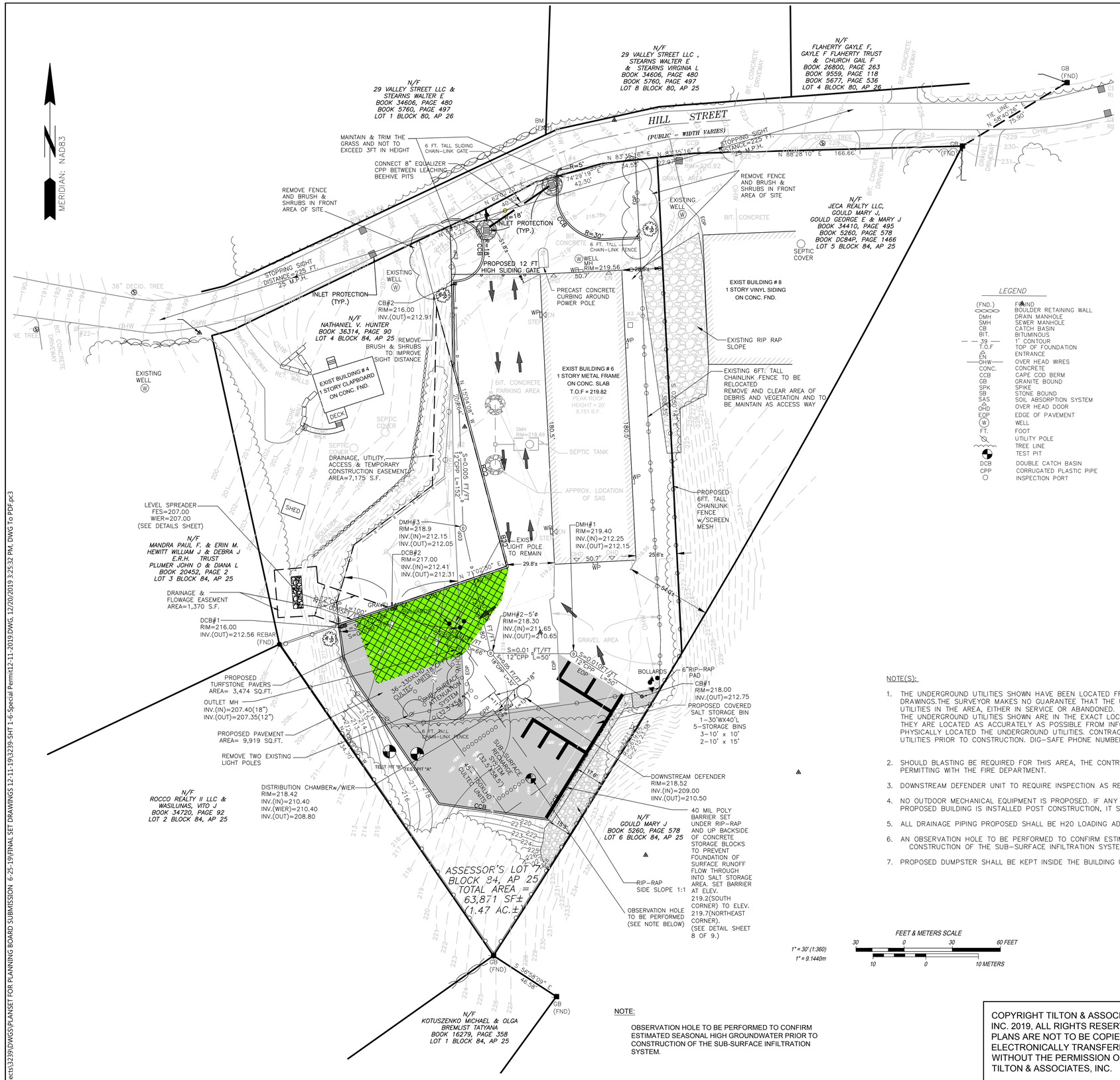


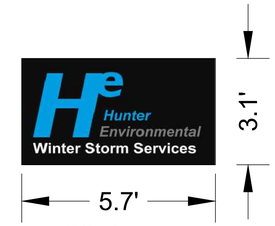


SIGN DETAIL
NOT TO SCALE

APPROVED BY THE TOWN OF NORFOLK PLANNING BOARD.
DATE :.....

.....

.....

.....

.....

.....

.....

I CERTIFY THAT 20 DAYS HAVE PASSED SINCE PLANNING BOARD APPROVAL AND NO APPEAL HAS BEEN FIELD IN THE OFFICE.

DATE: .....

.....

TOWN CLERK OF NORFOLK

PROPOSED WALL SIGN - 3.1' H x 5.7' L = 17.7 S.F. (>20 S.F.)
NON-ILLUMINATED, LEXAN BACKING WITH VINYL LETTERING

## LEGEND

| | |
|---|---|
| (FND.) | FOUND |
| | BOULDER RETAINING WALL |
| DMH | DRAIN MANHOLE |
| SMH | SEWER MANHOLE |
| CB | CATCH BASIN |
| BIT. | BITUMINOUS |
| 39 | 1' CONTOUR |
| T.O.F | TOP OF FOUNDATION |
| EN | ENTRANCE |
| OHW | OVER HEAD WIRES |
| CONC. | CONCRETE |
| CCB | CAPE COD BERM |
| GB | GRANITE BOUND |
| SPK | SPIKE |
| SB | STONE BOUND |
| SAS | SOIL ABSORPTION SYSTEM |
| OHD | OVER HEAD DOOR |
| EOP | EDGE OF PAVEMENT |
| W | WELL |
| FT. | FOOT |
| | UTILITY POLE |
| | TREE LINE |
| | TEST PIT |
| DCB | DOUBLE CATCH BASIN |
| CPP | CORRUGATED PLASTIC PIPE |
| | INSPECTION PORT |

NOTE(S):

1. THE UNDERGROUND UTILITIES SHOWN HAVE BEEN LOCATED FROM FIELD SURVEY INFORMATION AND EXISTING DRAWINGS.THE SURVEYOR MAKES NO GUARANTEE THAT THE UNDERGROUND UTILITIES SHOWN COMPRISE ALL SUCH UTILITIES IN THE AREA, EITHER IN SERVICE OR ABANDONED. THE SURVEYOR FURTHER DOES NOT WARRANT THAT THE UNDERGROUND UTILITIES SHOWN ARE IN THE EXACT LOCATION INDICATED, ALTHOUGH HE DOES CERTIFY THAT THEY ARE LOCATED AS ACCURATELY AS POSSIBLE FROM INFORMATION AVAILABLE. THE SURVEYOR HAS NOT PHYSICALLY LOCATED THE UNDERGROUND UTILITIES. CONTRACTORS ARE TO CHECK AND VERIFY THE LOCATION OF UTILITIES PRIOR TO CONSTRUCTION. DIG-SAFE PHONE NUMBER: 1-888-344-7233.
2. SHOULD BLASTING BE REQUIRED FOR THIS AREA, THE CONTRACTOR WILL BE REQUIRED TO FILE ALL REQUIRED PERMITTING WITH THE FIRE DEPARTMENT.
3. DOWNSTREAM DEFENDER UNIT TO REQUIRE INSPECTION AS REQUIRED. SEE SWPP PLAN.
4. NO OUTDOOR MECHANICAL EQUIPMENT IS PROPOSED. IF ANY MECHANICAL EQUIPMENT ASSOCIATED WITH THE PROPOSED BUILDING IS INSTALLED POST CONSTRUCTION, IT SHALL BE PROVIDED WITH SCREENING.
5. ALL DRAINAGE PIPING PROPOSED SHALL BE H20 LOADING ADS N12 PIPE UNLESS NOTED.
6. AN OBSERVATION HOLE TO BE PERFORMED TO CONFIRM ESTIMATED SEASONAL HIGH GROUNDWATER PRIOR TO CONSTRUCTION OF THE SUB-SURFACE INFILTRATION SYSTEM.
7. PROPOSED DUMPSTER SHALL BE KEPT INSIDE THE BUILDING UNTIL DAY OF SCHEDULED TRASH PICKUP.

NOTE:

OBSERVATION HOLE TO BE PERFORMED TO CONFIRM ESTIMATED SEASONAL HIGH GROUNDWATER PRIOR TO CONSTRUCTION OF THE SUB-SURFACE INFILTRATION SYSTEM.

FEET & METERS SCALE
30 0 30 60 FEET
10 0 10 METERS
1" = 30' (1:360)
1" = 9.1440m

# BUILDING LAYOUT AND UTILITY PLAN FOR 6 HILL STREET

IN

NORFOLK , MASSACHUSETTS

PREPARED FOR

HE PROPERTIES, LLC.
6 HILL STREET
NORFOLK, MASSACHUSETTS 02056

SCALE: 1" = 30'
DATE: JUNE 19, 2019
DRAWN BY: RLW
CHECKED BY: THL, LET
JOB NO. 3239
DWG. NO. 1

COPYRIGHT TILTON & ASSOCIATES, INC. 2019, ALL RIGHTS RESERVED. PLANS ARE NOT TO BE COPIED OR ELECTRONICALLY TRANSFERRED WITHOUT THE PERMISSION OF TILTON & ASSOCIATES, INC.

COMMONWEALTH OF MASSACHUSETTS DALE MACKENZIE THOM CIVIL No. 34575 REGISTERED PROFESSIONAL ENGINEER

COMMONWEALTH OF MASSACHUSETTS LARRY E. TILTON No. 27198 REGISTERED PROFESSIONAL LAND SURVEYOR

TILTON AND ASSOCIATES, INC.
81 John L. Dietsch Boulevard
P.O. Box 467
North Attleborough, MA 02761
Tel: (508)699-4120 Fax: (508)699-7810
Web: www.tilton-assoc.com Email: dwgs@tilton-assoc.com
LAND SURVEYING, CIVIL ENGINEERING AND ENVIRONMENTAL PERMITTING

REVISIONS:
6-25-2019 - ADJUSTMENTS BASED ON STORMWATER DESIGN
8-5-2019 BETA PEER REVIEW LETTER AND MEETING WITH TOWN PLANNER
8-28-2019 PER BETA REVIEW LETTER
9-26-2019 PER BETA REVIEW LETTER
12-11-2019 PER PLANNING BOARD 10-8-2019 MEETING COMMENTS



G:\Projects\3239\DWGS\PLANSET FOR PLANNING BOARD SUBMISSION 6-25-19\FINAL SET DRAWINGS 12-11-19\3239-SHT 1-6-Special Permit12-11-2019.DWG, 12/20/2019 3:25:32 PM, DWG To PDF.pc3

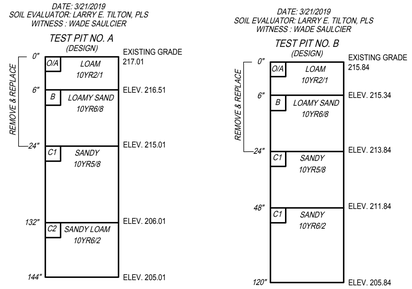


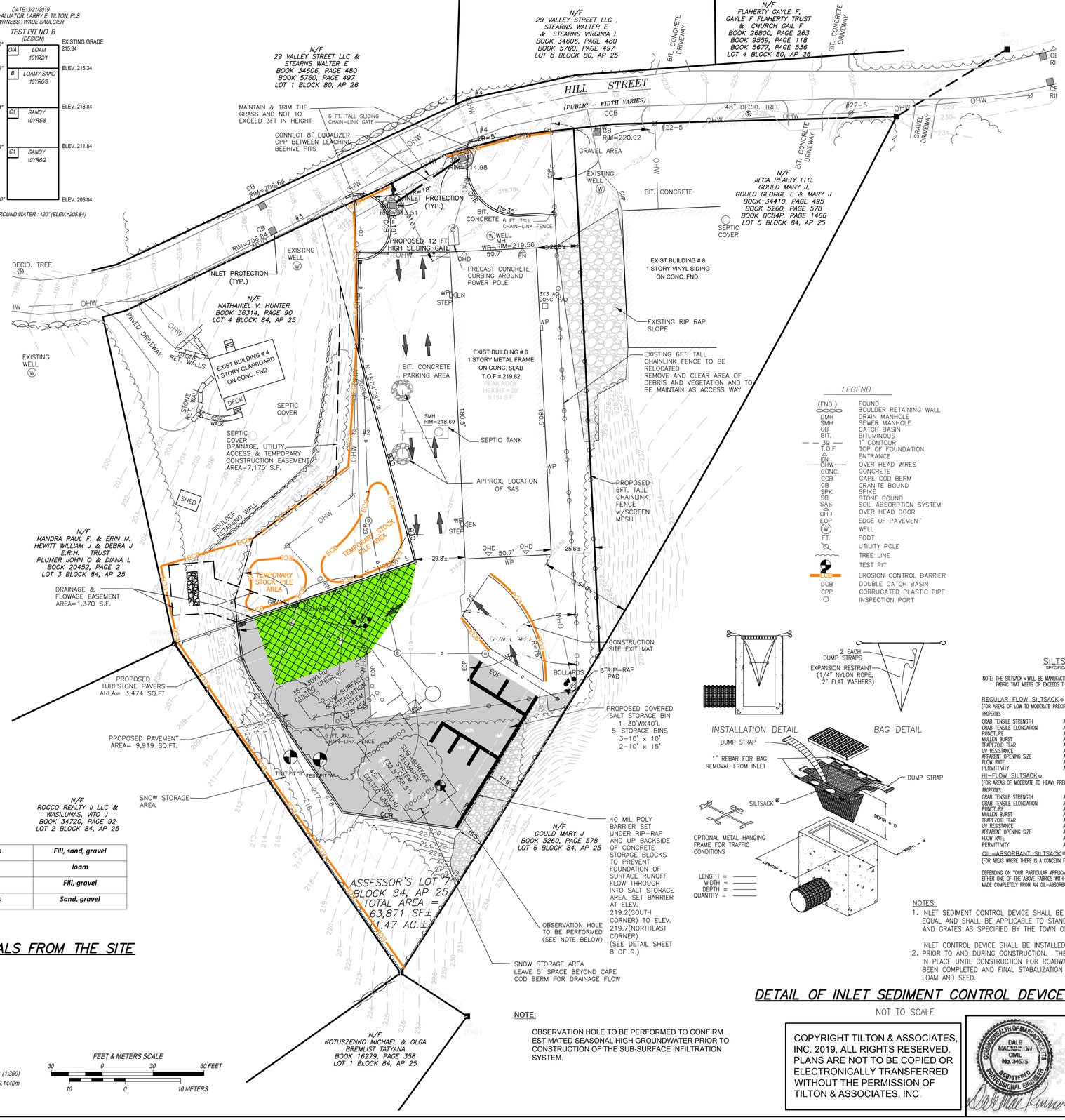


| Move | 2,390 cubic yards | Fill, sand, gravel |
|---|---|---|
| Strip | 174 cubic yards | loam |
| Stockpile | 270 cubic yards | Fill, gravel |
| Remove | 2,175 cubic yards | Sand, gravel |

## VOLUME OF EARTH MATERIALS FROM THE SITE

FEET & METERS SCALE

1" = 30' (1:360)
1" = 9.1440m

30 0 30 60 FEET
10 0 10 METERS

NOTE:

OBSERVATION HOLE TO BE PERFORMED TO CONFIRM ESTIMATED SEASONAL HIGH GROUNDWATER PRIOR TO CONSTRUCTION OF THE SUB-SURFACE INFILTRATION SYSTEM.

APPROVED BY THE TOWN OF NORFOLK PLANNING BOARD.

DATE : .....

.....

.....

.....

.....

.....

.....

I CERTIFY THAT 20 DAYS HAVE PASSED SINCE PLANNING BOARD APPROVAL AND NO APPEAL HAS BEEN FIELD IN THE OFFICE.

DATE: .....

.....

TOWN CLERK OF NORFOLK

NOTE(S):
AN EARTH RELOCATION/REMOVAL PERMIT IS REQUIRED WITH THE TOWN OF NORFOLK

CONTRACTOR TO FOLLOW THE CONSTRUCTION SEQUENCING SCHEDULE BELOW:

1–ALL CONSTRUCTION WORK SHALL BE LAID OUT AND CONTROLLED BY SURVEY AND SHALL FOLLOW THE APPROVED SITE DEVELOPMENT PLAN.

2–ALL STORMWATER EROSION CONTROL SHALL BE CONSTRUCTED PRIOR TO ANY CLEARING OF THE SITE AND/OR CONSTRUCTION ON THE SITE TO SERVICE.

3–STAKE LIMIT OF WORK AND INSTALL SILTATION BARRIER.

4–CLEAR ALL TREES AND REMOVE STUMPS FROM SITE WHERE APPLICABLE.

5–DURING EARTH REMOVAL PROCESS THERE WILL BE A STONE MAT FOR CONSTRUCTION VEHICLES TO CROSS OVER PRIOR TO EXITING THE SITE. THIS STONE MAT WILL BE LOCATED AT THE SOUTH END OF THE BUILDING ON THE EXISTING GRAVEL AREA. VEHICLES ENTERING THE SITE WILL GET TO THE END OF THE BUILDING AND TURN RIGHT IN A WESTERLY DIRECTION. VEHICLES LEAVING THE SITE WILL PROCEED OVER THE CRUSHED STONE MAT. ONCE ALL EXCAVATION, BACKFILLING, GRADING AND ONLY FINAL PAVING REMAINING TO BE DONE, THEN THE CRUSHED STONE EXIT MAT MAYBE REMOVED. THE STONE MAT SHALL BE MINIMUM OF 6 INCHES THICK AND CONSTRUCTED OF 2 INCH CRUSHED STONE. THE CRUSHED STONE MAT SHALL HAVE FILTREXX®SOXX ON THE SIDES AS SHOWN HEREON.

6–PREPARE THE CONSTRUCTION EXIT PAD.

7–CUTS AND FILLS OF THE SOIL TO TAKE PLACE. ANY SURPLUS MATERIAL LEFT STOCKPILED SHALL BE PROTECTED WITH A SILTATION CONTROL BARRIER AROUND ITS PERIMETER UNTIL REMOVED.

8–THE ENTIRE SITE SHALL BE ROUGHED TO SUBGRADE.

9–CONSTRUCT NEW DRAINAGE SYSTEM.

10–RIP RAP SLOPES.

11–INSTALL ALL UNDERGROUND UTILITIES.

12–INSTALL THE BINDER LAYER OF PAVEMENT.

13–MAINTAIN AND REMOVE ANY ACCUMULATED SEDIMENT FROM THE SITES DEEP SUMP CATCH BASINS.

14–COMPLETE FINE GRADING OF THE DISTURBED SITE AREAS AND COMMENCE THE SITE LANDSCAPE PLANTING WORK.

15–FINISH THE TOP COURSE OF PAVEMENT.

16–COMPLETE LOAM AND SEED AND LANDSCAPING WITHIN THE SITE.

17–CONTRACTOR TO COMPLY WITH ALL REQUIREMENTS SETFORTH IN THE STORMWATER REPORT AND STORWATER POLLUTION PREVENTION PLAN. ALL SYSTEMS SHALL BE THOROUGHLY CLEANED AND VERIFIED OPERATING PRIOR TO BE TURNED OVER TO THE OWNER.

### LEGEND

| | |
|---|---|
| (FND.) | FOUND |
| | BOULDER RETAINING WALL |
| DMH | DRAIN MANHOLE |
| SMH | SEWER MANHOLE |
| CB | CATCH BASIN |
| BIT. | BITUMINOUS |
| 39 | 1' CONTOUR |
| T.O.F | TOP OF FOUNDATION |
| EN | ENTRANCE |
| OHW | OVER HEAD WIRES |
| CONC. | CONCRETE |
| CCB | CAPE COD BERM |
| GB | GRANITE BOUND |
| SPK | SPIKE |
| SB | STONE BOUND |
| SAS | SOIL ABSORPTION SYSTEM |
| OHD | OVER HEAD DOOR |
| EOP | EDGE OF PAVEMENT |
| W | WELL |
| FT. | FOOT |
| | UTILITY POLE |
| | TREE LINE |
| | TEST PIT |
| | EROSION CONTROL BARRIER |
| DCB | DOUBLE CATCH BASIN |
| CPP | CORRUGATED PLASTIC PIPE |
| | INSPECTION PORT |




### SILTSACK®
SPECIFICATIONS

NOTE: THE SILTSACK ® WILL BE MANUFACTURED FROM A WOVEN POLYPROPYLENE FABRIC THAT MEETS OR EXCEEDS THE FOLLOWING SPECIFICATIONS.

REGULAR FLOW SILTSACK ®
(FOR AREAS OF LOW TO MODERATE PRECIPITATION AND RUN-OFF)

| PROPERTIES | TEST METHOD | UNITS |
|---|---|---|
| GRAB TENSILE STRENGTH | ASTM D-4632 | 300 LBS |
| GRAB TENSILE ELONGATION | ASTM D-4632 | 20 % |
| PUNCTURE | ASTM D-4833 | 120 LBS |
| MULLEN BURST | ASTM D-3786 | 800 PSI |
| TRAPEZOID TEAR | ASTM D-4533 | 120 LBS |
| UV RESISTANCE | ASTM D-4355 | 80 % |
| APPARENT OPENING SIZE | ASTM D-4751 | 40 US SIEVE |
| FLOW RATE | ASTM D-4491 | 40 GAL/MIN/SQ FT |
| PERMITTIVITY | ASTM D-4491 | 0.55 SEC -1 |

HI-FLOW SILTSACK ®
(FOR AREAS OF MODERATE TO HEAVY PRECIPITATION AND RUN-OFF)

| PROPERTIES | TEST METHOD | UNITS |
|---|---|---|
| GRAB TENSILE STRENGTH | ASTM D-4632 | 265 LBS |
| GRAB TENSILE ELONGATION | ASTM D-4632 | 20 % |
| PUNCTURE | ASTM D-4833 | 135 LBS |
| MULLEN BURST | ASTM D-3786 | 420 PSI |
| TRAPEZOID TEAR | ASTM D-4533 | 45 LBS |
| UV RESISTANCE | ASTM D-4355 | 90 % |
| APPARENT OPENING SIZE | ASTM D-4751 | 20 US SIEVE |
| FLOW RATE | ASTM D-4491 | 200 GAL/MIN/SQ FT |
| PERMITTIVITY | ASTM D-4491 | 1.5 SEC -1 |

OIL-ABSORBANT SILTSACK ®
(FOR AREAS WHERE THERE IS A CONCERN FOR OIL RUN-OFF OR SPILLS)

DEPENDING ON YOUR PARTICULAR APPLICATION, THE SILTSACK® CAN BE MADE FROM EITHER ONE OF THE ABOVE FABRICS WITH AN OIL-ABSORBANT PILLOW INSERT OR, MADE COMPLETELY FROM AN OIL-ABSORBANT SILTSACK®, WITH A WOVEN PILLOW INSERT.

NOTES:
1. INLET SEDIMENT CONTROL DEVICE SHALL BE SILT SACK OR APPROVED EQUAL AND SHALL BE APPLICABLE TO STANDARD CATCH BASIN FRAME AND GRATES AS SPECIFIED BY THE TOWN OF NORFOLK DPW.

   INLET CONTROL DEVICE SHALL BE INSTALLED IN ALL CATCH BASINS
2. PRIOR TO AND DURING CONSTRUCTION. THESE DEVICES SHALL REMAIN IN PLACE UNTIL CONSTRUCTION FOR ROADWAY AND BUILDINGS HAS BEEN COMPLETED AND FINAL STABALIZATION HAS BEEN PROVIDED WITH LOAM AND SEED.

## DETAIL OF INLET SEDIMENT CONTROL DEVICE

NOT TO SCALE

# EROSION CONTROL AND GRADING PLAN FOR 6 HILL STREET

IN

NORFOLK , MASSACHUSETTS

PREPARED FOR

HE PROPERTIES, LLC.
6 HILL STREET
NORFOLK, MASSACHUSETTS 02056

SCALE: 1" = 30'
DATE: JUNE 19, 2019

DRAWN BY: RLW
CHECKED BY: THL, LET

JOB NO. 3239
DWG. NO. 1

COPYRIGHT TILTON & ASSOCIATES, INC. 2019, ALL RIGHTS RESERVED. PLANS ARE NOT TO BE COPIED OR ELECTRONICALLY TRANSFERRED WITHOUT THE PERMISSION OF TILTON & ASSOCIATES, INC.

COMMONWEALTH OF MASSACHUSETTS
DALE T. MACKEY JR.
CIVIL
NO. 34575
REGISTERED PROFESSIONAL ENGINEER

COMMONWEALTH OF MASSACHUSETTS
LARRY E. TILTON
NO. 21596
REGISTERED PROFESSIONAL LAND SURVEYOR

TILTON AND ASSOCIATES, INC.
81 John L. Dietsch Boulevard
P.O. Box 467
North Attleborough, MA 02761
Tel: (508)699-4120 Fax: (508)699-7810
Web: www.tilton-assoc.com Email: dwgs@tilton-assoc.com
LAND SURVEYING, CIVIL ENGINEERING AND ENVIRONMENTAL PERMITTING

REVISIONS:
6-25-2019 – ADJUSTMENTS BASED ON STORMWATER DESIGN
8-5-2019 BETA PEER REVIEW LETTER AND MEETING WITH TOWN PLANNER
8-28-2019 PER BETA REVIEW LETTER
9-26-2019 PER BETA REVIEW LETTER
12-11-2019 PER PLANNING BOARD 10-8-2019 MEETING COMMENTS



G:\Projects\3239\DWGS\PLANSET FOR PLANNING BOARD SUBMISSION 6-25-19\FINAL SET DRAWINGS 12-11-19\3239-SHT 1-6-Special Permit12-11-2019.DWG, 12/20/2019 3:31:12 PM, DWG To PDF.pc3

APPROVED BY THE TOWN OF NORFOLK PLANNING BOARD.
DATE ;.....

.....

.....

.....

.....

.....

.....

I CERTIFY THAT 20 DAYS HAVE PASSED SINCE PLANNING BOARD APPROVAL AND NO APPEAL HAS BEEN FIELD IN THE OFFICE.

DATE: .....

.....
TOWN CLERK OF NORFOLK

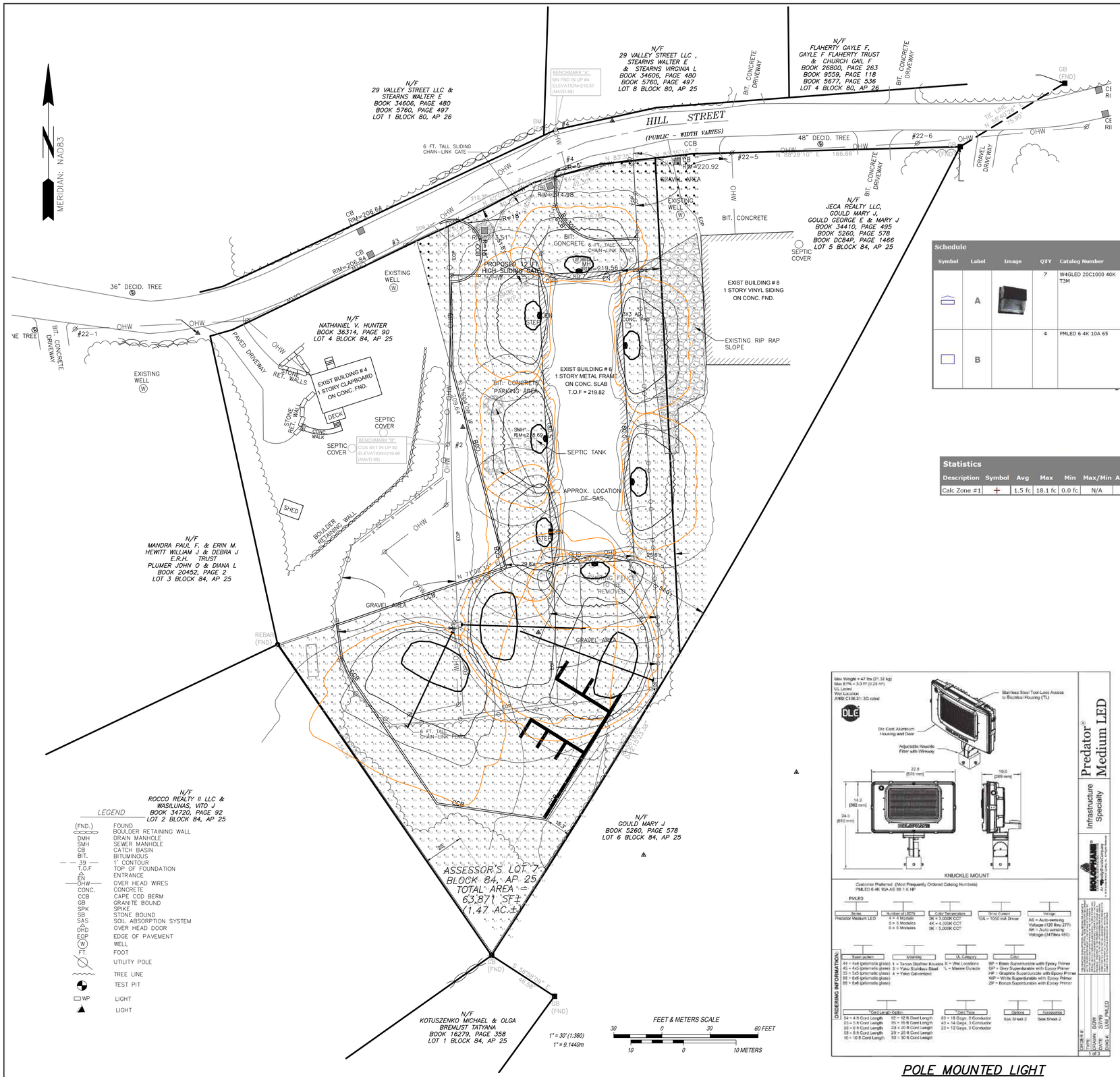


## Schedule

| Symbol | Label | Image | QTY | Catalog Number | Description | Lamp | Number Lamps | Lumens per Lamp | LLF | Wattage | Polar Plot |
|---|---|---|---|---|---|---|---|---|---|---|---|
| | A | | 7 | W4GLED 20C1000 40K T3M | W4GLED, 20 LED, 20C PERFORMANCE PACKAGE, 4000K CCT, TYPE 3 OPTICS | LED | 1 | 6983 | 0.92 | 72 | Max: 4117cd |
| | B | | 4 | PMLED 6 4K 10A 6S | Predator Medium LED with 6 COBs, 4000K Color Temperature , 1050mA Drive Current , 6X5 Distribution | LED | 1 | Absolute | 0.92 | 261 | Max: 22063cd |

## Statistics

| Description | Symbol | Avg | Max | Min | Max/Min | Avg/Min |
|---|---|---|---|---|---|---|
| Calc Zone #1 | + | 1.5 fc | 18.1 fc | 0.0 fc | N/A | N/A |

## Luminaire Locations

| No. | Label | Location X | Location Y | Location Z | MH | Orientation | Tilt | Aim X | Aim Y | Aim Z |
|---|---|---|---|---|---|---|---|---|---|---|
| 1 | A | -3337.38 | -2939.66 | 10.00 | 10.00 | 0.00 | 0.00 | -3337.38 | -2939.66 | 0.00 |
| 2 | A | -3361.41 | -2966.99 | 10.00 | 10.00 | 270.28 | 0.00 | -3361.41 | -2966.99 | 0.00 |
| 3 | A | -3357.70 | -3043.41 | 10.00 | 10.00 | 267.50 | 0.00 | -3357.70 | -3043.41 | 0.00 |
| 4 | A | -3354.39 | -3101.56 | 10.00 | 10.00 | 267.74 | 0.00 | -3354.39 | -3101.56 | 0.00 |
| 5 | A | -3327.57 | -3120.89 | 10.00 | 10.00 | 177.67 | 0.00 | -3327.57 | -3120.89 | 0.00 |
| 6 | A | -3304.69 | -3070.34 | 10.00 | 10.00 | 90.00 | 0.00 | -3304.69 | -3070.34 | 0.00 |
| 7 | A | -3309.06 | -2985.57 | 10.00 | 10.00 | 88.29 | 0.00 | -3309.06 | -2985.57 | 0.00 |
| 1 | B | -3290.82 | -3198.93 | 20.00 | 20.00 | 241.18 | 78.23 | -3374.91 | -3245.19 | 0.00 |
| 2 | B | -3291.40 | -3193.72 | 20.00 | 20.00 | 290.33 | 77.14 | -3373.55 | -3163.28 | 0.00 |
| 3 | B | -3416.04 | -3164.00 | 20.00 | 20.00 | 205.18 | 72.97 | -3443.82 | -3223.08 | 0.00 |
| 4 | B | -3410.13 | -3159.18 | 20.00 | 20.00 | 91.77 | 75.38 | -3333.48 | -3161.55 | 0.00 |




POLE MOUNTED LIGHT

WALL PACK LIGHT

# LIGHTING PLAN FOR 6 HILL STREET

IN

NORFOLK , MASSACHUSETTS

PREPARED FOR

HUNTER ENVIRONMENTAL WINTER STORM SERVICES LLC.
492 LINCOLN RD.
WALPOLE, MASSACHUSETTS 02081

SCALE: 1" = 30'
DATE: JUNE 19, 2019
DRAWN BY: RLW
CHECKED BY: THL, LET
JOB NO. 3239
DWG. NO. 1


TILTON AND ASSOCIATES, INC.
81 John L. Dietsch Boulevard
P.O. Box 467
North Attleborough, MA 02761
Tel: (508)699-4120 Fax: (508)699-7810
Web: www.tilton-assoc.com Email: dwg@tilton-assoc.com
LAND SURVEYING, CIVIL ENGINEERING AND ENVIRONMENTAL PERMITTING


COMMONWEALTH OF MASSACHUSETTS — DALE MACKENZIE LAW — CIVIL — No. 34575 — REGISTERED PROFESSIONAL ENGINEER

COMMONWEALTH OF MASSACHUSETTS — LARRY E. TILTON — No. 27118 — REGISTERED PROFESSIONAL LAND SURVEYOR

REVISIONS:
6-25-2019 – ADJUSTMENTS BASED ON STORMWATER DESIGN
8-5-2019 BETA PEER REVIEW LETTER AND MEETING WITH TOWN PLANNER
8-28-2019 PER BETA REVIEW LETTER
9-26-2019 PER BETA REVIEW LETTER
12-11-2019 PER PLANNING BOARD 10-8-2019 MEETING COMMENTS



G:\Projects\3239\DWGS\PLANSET FOR PLANNING BOARD SUBMISSION 6-25-19\FINAL SET DRAWINGS 12-11-19\3239-SHT 5-Special Permit-12-11-2019-lighting.dwg, 12/11/2019 3:47:08 PM, DWG To PDF.pc3

FIRE HYDRANT NOTE:

THE NORTHWEST CORNER OF THE SITE IS 338'± TO THE EXISTING FIRE HYDRANT ON THE WESTERLY SIDE OF THE INTERSECTION OF HILL STREET & VALLEY STREET

MERIDIAN: NAD83

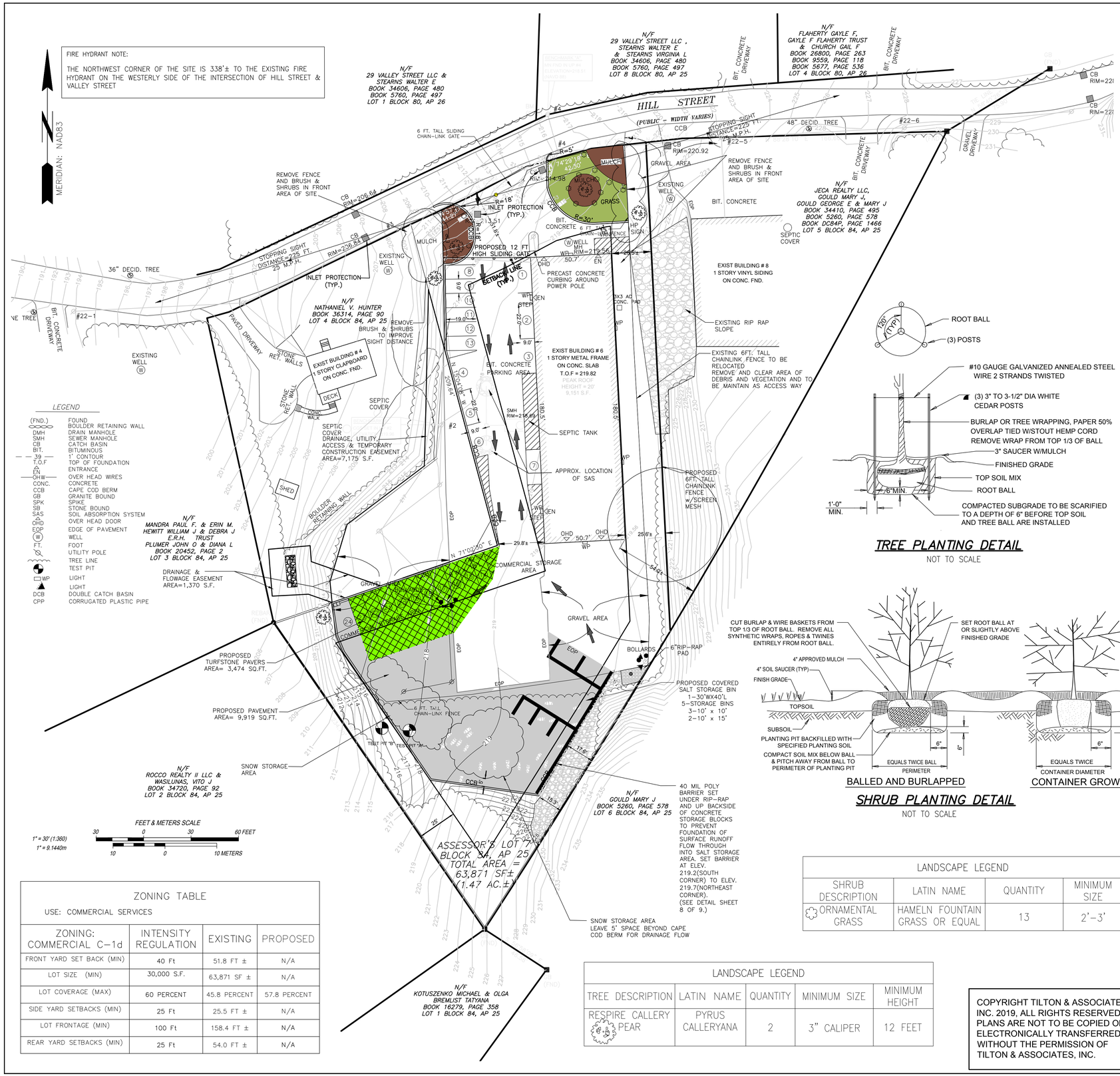


## LEGEND

| | |
|---|---|
| (FND.) | FOUND |
| | BOULDER RETAINING WALL |
| DMH | DRAIN MANHOLE |
| SMH | SEWER MANHOLE |
| CB | CATCH BASIN |
| BIT. | BITUMINOUS |
| 39 | 1' CONTOUR |
| T.O.F | TOP OF FOUNDATION |
| EN | ENTRANCE |
| OHW | OVER HEAD WIRES |
| CONC. | CONCRETE |
| CCB | CAPE COD BERM |
| GB | GRANITE BOUND |
| SPK | SPIKE |
| SB | STONE BOUND |
| SAS | SOIL ABSORPTION SYSTEM |
| OHD | OVER HEAD DOOR |
| EOP | EDGE OF PAVEMENT |
| W | WELL |
| FT. | FOOT |
| | UTILITY POLE |
| | TREE LINE |
| | TEST PIT |
| WP | LIGHT |
| | LIGHT |
| DCB | DOUBLE CATCH BASIN |
| CPP | CORRUGATED PLASTIC PIPE |

| ZONING TABLE | | | |
|---|---|---|---|
| USE: COMMERCIAL SERVICES | | | |
| ZONING: COMMERCIAL C-1d | INTENSITY REGULATION | EXISTING | PROPOSED |
| FRONT YARD SET BACK (MIN) | 40 Ft | 51.8 FT ± | N/A |
| LOT SIZE (MIN) | 30,000 S.F. | 63,871 SF ± | N/A |
| LOT COVERAGE (MAX) | 60 PERCENT | 45.8 PERCENT | 57.8 PERCENT |
| SIDE YARD SETBACKS (MIN) | 25 Ft | 25.5 FT ± | N/A |
| LOT FRONTAGE (MIN) | 100 Ft | 158.4 FT ± | N/A |
| REAR YARD SETBACKS (MIN) | 25 Ft | 54.0 FT ± | N/A |

| LANDSCAPE LEGEND | | | | |
|---|---|---|---|---|
| TREE DESCRIPTION | LATIN NAME | QUANTITY | MINIMUM SIZE | MINIMUM HEIGHT |
| RESPIRE CALLERY PEAR | PYRUS CALLERYANA | 2 | 3" CALIPER | 12 FEET |

| LANDSCAPE LEGEND | | | |
|---|---|---|---|
| SHRUB DESCRIPTION | LATIN NAME | QUANTITY | MINIMUM SIZE |
| ORNAMENTAL GRASS | HAMELN FOUNTAIN GRASS OR EQUAL | 13 | 2'-3' |




## TREE PLANTING DETAIL

NOT TO SCALE

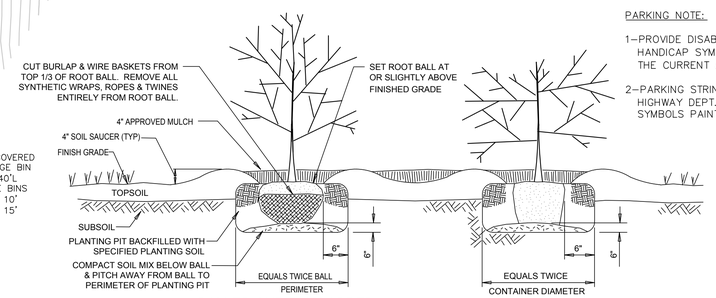


## SHRUB PLANTING DETAIL

NOT TO SCALE

| PARKING SUMMARY TABLE | | | |
|---|---|---|---|
| TOTAL BUILDING AREA= 9,151±S.F. | | | |
| EXISTING OFFICES AREA=600±S.F./1SPACE/200 S.F. = 3 | | | |
| EXISTING WAREHOUSE/STORAGE AREA= 8,551±S.F./1SPACE/500 S.F. = 18 | | | |
| TOTAL REQUIRED PARKING SPACES = 21 SPACES | | | |
| TOTAL PROVIDED PARKING SPACES = 25 SPACES | | | |
| PARKING SPACES: | EXISTING PARKING | REQUIRED PARKING | PROVIDED PARKING |
| STANDARD PARKING | 15 | 21 | 25 |
| TOTAL | 15 | 21 | 25 |
| HANDICAP ACCESSIBLE** | 1 | 1 | 1 |

* * NUMBER OF HANDICAPPED SPACES IS BASED THE REQUIRED PARKING COUNT.

SIGN NOTES:

1-NO FREESTANDING SIGN SHALL BE LOCATED WITHIN 40' OF ANY SIDE PROPERTY LINE.
2-NO FREESTANDING SIGN SHALL BE HIGHER THAN 10' FROM AVERAGE FINISHED GRADE TO THE TOP OF THE SIGN.
3-NO SIGN LIGHTING PROPOSED.

ACCESS NOTE:

1-THE MAXIMUM SIZE VEHICLE FOR SITE ACCESS IS GARBAGE TRUCK. AVERAGE: LENGTH=41', WHEELBASE=19.5', AND WIDTH=8'

LANDSCAPE NOTE:

1-ALL TREES SHALL BE 3" MINIMUM TRUNK DIAMETER AT TIME OF PLANTING.
2-ALL LANDSCAPED AND GRASS/LAWN AREAS SHALL BE COVERED WITH 6" OF LOAM..
3-ALL MECHANICAL EQUIPMENT TO BE SCREENED.
4-MAINTAIN VEGETATION AS CLOSE AS POSSIBLE TO THE GROUND SURFACE.

SEEDING FOR RE-VEGETATION IN SLOPES

RATE OF MINIMUM APPLICATION 2 LBS OF SEED PER 1000 SQUARE FEET. SPECIFIED SEED WILL BE A MINIMUM OF 97 PERCENT PURE AND HAVE A GERMINATION RATE OF 90 PERCENT. SHALL BE MASSDOT SPEC M6.03.0 SEED FOR SLOPES AND SHOULDERS.

| SEED MIXTURE | PERCENT BY WEIGHT |
|---|---|
| VIRGINIA CREEPER (COMMON NAME) PARTHENOCISSUS QUINQUEFOLIA | 40% |
| ALSIKE CLOVER (COMMON NAME) TRIFOLIUM HYBRIDUM | 30% |
| PURPLE CROWNRETCH (COMMON NAME) CORONILLA VARIA | 30% |

LANDSCAPE AREA REQUIREMENT CALCULATION:

REQUIRED: 40 S.F. FOR EACH FOOT OF FRONTAGE
(158.4 FEET X 40 S.F.) = 6,336 S.F. OF LANDSCAPING AREA REQUIRED
PROPOSED: 6,478 ± S.F. OF LANDSCAPING AREA.

PARKING NOTE:

1-PROVIDE DISABLED ACCESSIBLE SPACE WITH A "VAN ACCESSIBLE" SIGN. HANDICAP SYMBOLS AND CROSS HATCH TO BE PAINTED YELLOW.(SYMBOLS AND SIGNS MUST MEET THE CURRENT AMERICANS WITH DISABILITIES ACT (A.D.A) REGULATIONS.

2-PARKING STRING TO BE 4" PAINTED WHITE PAINT SHALL COMPLY WITH CURRENT MASSACHUSETTS HIGHWAY DEPT. STANDARD SPECIFICATIONS. CROSS HATCH TO BE 12" WIDE, PAINTED YELLOW AND SYMBOLS PAINTED YELLOW. PAINT TO BE REFLECTIVE THERMOPLASTIC.

LOT COVERAGE CALCULATIONS:

ROOF AREA = 9,145 S.F.
PAVEMENT / IMPERVIOUS AREA = 27,780 S.F.
TOTAL IMPERVIOUS AREA = 36,925 S.F. (57.8% LOT COVERAGE)
(TOTAL IMPERVIOUS AREA / LOT AREA) X 100 = % LOT COVERAGE
(36,925 S.F. / 63,871 S.F.) X 100 = 57.8 % LOT COVERAGE

| PARKING SPACES AVAILABLE: |
|---|
| HANDICAP ACCESSIBLE:1 |
| STANDARD PARKING:24 |
| TOTAL: 25 |

APPROVED BY THE TOWN OF NORFOLK PLANNING BOARD.
DATE : .....

I CERTIFY THAT 20 DAYS HAVE PASSED SINCE PLANNING BOARD APPROVAL AND NO APPEAL HAS BEEN FIELD IN THE OFFICE.
DATE: .....

TOWN CLERK OF NORFOLK

# LANDSCAPE AND PARKING PLAN FOR 6 HILL STREET

IN

NORFOLK , MASSACHUSETTS

PREPARED FOR

HE PROPERTIES, LLC.
6 HILL STREET
NORFOLK, MASSACHUSETTS 02056

SCALE: 1" = 30'
DATE: JUNE 19, 2019
DRAWN BY: RLW
CHECKED BY: THL, LET
JOB NO. 3239
DWG. NO. 1


TILTON AND ASSOCIATES, INC.
81 John L. Dietsch Boulevard
P.O. Box 467
North Attleborough, MA 02761
Tel: (508)699-4120 Fax: (508)699-7810
Web: www.tilton-assoc.com Email: dwgs@tilton-assoc.com
LAND SURVEYING, CIVIL ENGINEERING AND ENVIRONMENTAL PERMITTING



COPYRIGHT TILTON & ASSOCIATES, INC. 2019, ALL RIGHTS RESERVED. PLANS ARE NOT TO BE COPIED OR ELECTRONICALLY TRANSFERRED WITHOUT THE PERMISSION OF TILTON & ASSOCIATES, INC.


COMMONWEALTH OF MASSACHUSETTS DALE MACKAY JR. CIVIL NO. 34575 REGISTERED PROFESSIONAL ENGINEER

COMMONWEALTH OF MASSACHUSETTS LARRY E. TILTON NO. 29128 REGISTERED PROFESSIONAL LAND SURVEYOR

REVISIONS:
6-25-2019 - ADJUSTMENTS BASED ON STORMWATER DESIGN
8-5-2019 BETA PEER REVIEW LETTER AND MEETING WITH TOWN PLANNER
8-28-2019 PER BETA REVIEW LETTER
9-26-2019 PER BETA REVIEW LETTER
12-11-2019 PER PLANNING BOARD 10-8-2019 MEETING COMMENTS

SHEET 6 OF 9


G:\Projects\3239\DWGS\PLANSET FOR PLANNING BOARD SUBMISSION 6-25-19\FINAL SET DRAWINGS 12-11-19\3239-SHT 1-6-Special Permit12-11-2019.DWG, 12/20/2019 3:40:50 PM, DWG To PDF.pc3

APPROVED BY THE TOWN OF NORFOLK PLANNING BOARD.
DATE :.....

.....

.....

.....

.....

.....

.....

I CERTIFY THAT 20 DAYS HAVE PASSED SINCE PLANNING BOARD APPROVAL AND NO APPEAL HAS BEEN FIELD IN THE OFFICE.

DATE: .....

.....
TOWN CLERK OF NORFOLK

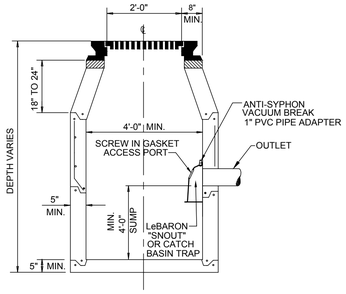


## HOODED CATCH BASIN
NOT TO SCALE

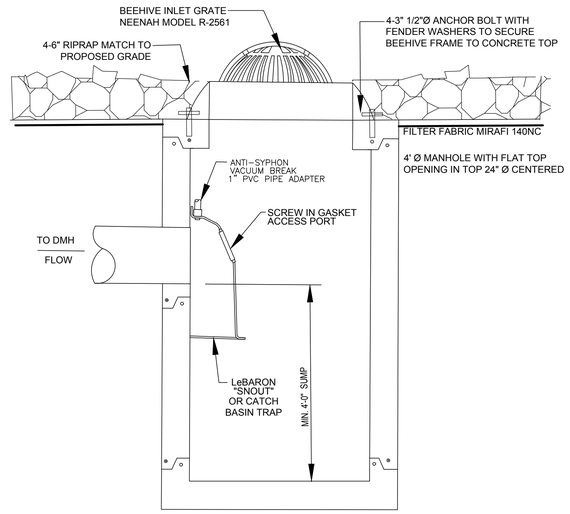


## DETAIL CB#1
NOT TO SCALE

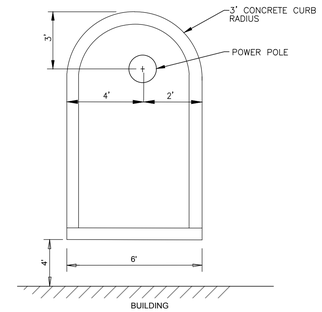


## UTILITY POLE CURB DETAIL
NOT TO SCALE

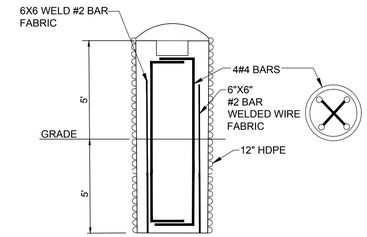


## BOLLARD DETAIL
NOT TO SCALE

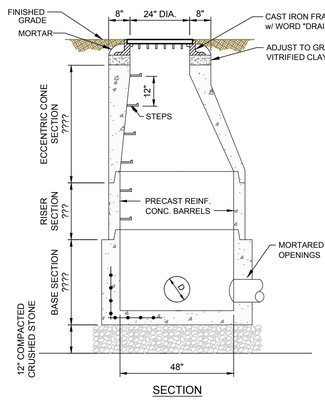


SECTION

GENERAL NOTES:

1. REINFORCED STEEL CONFORMS TO LATEST A185 SPEC. 0.12 SQ. IN./LINEAL FT. AND 0.12 SQ. IN.(BOTH WAYS) BASE BOTTOM.
2. CONCRETE COMPRESSIVE STRENGTH-4000 PSI MIN.
3. MANHOLE DESIGN-SPECS. CONFORMS TO LATEST ASTM C478 SPEC. FOR "PRECAST REINFORCED CONCRETE MANHOLE SECTIONS".
4. STEPS SHALL BE STEEL REINFORCED COPOLYMER POLYPROPYLENE PLASTIC PER ASTM C-478,PARA. 11.
5. "V" PIPE OPENINGS w/ 2" MAX. OUTSIDE PIPE CLEARANCE TO BE CAST AS REQUIRED.
6. JOINT SEALANT SHALL BE PREFORMED BUTYL RUBBER MASTIC TAPE SEAL THAT COMPLIES w/ AASHTO SPECIFICATION M-198 OR SYNTHETIC RUBBER GASKET THAT COMPLIES w/ C-443 OR C-361.
7. BASE SECTION SHALL BE ONE POUR MONOLITHIC.

## 48" DIAMETER PRECAST DRAIN MANHOLE DETAIL
NOT TO SCALE

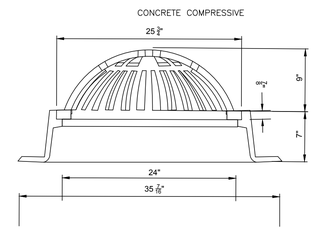

## BEEHIVE INLET GRATE NEENAH MODEL R-2561
NOT TO SCALE

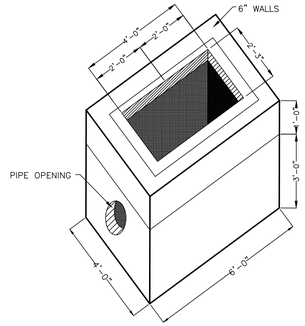


NOTE:
1. CATCH BASIN OPENING 27"x24" WITH NO SHELF AND CLEAR DROP.

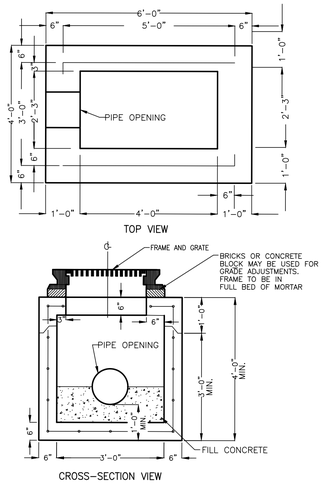


## DOUBLE GRATE GUTTER INLET
(NOT TO SCALE)

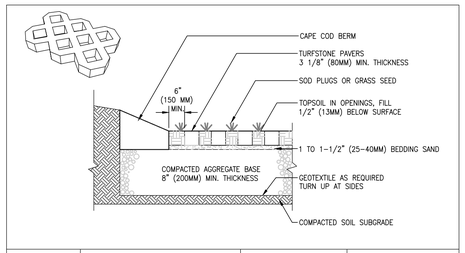


| | | |
|---|---|---|
| UNILOCK | COMMERCIAL PAVING<br>PAVER DETAIL<br>CREATED:<br>REVISED: January 17, 2018<br>FILE NAME | NOTES:<br>This cross section is intended for preliminary design purposes only. Confirm site conditions and consult with a qualified design professional or installer prior to installation. |

UNILOCK DESIGNED TO CONNECT.

## TURFSTONE© DETAIL
(NOT TO SCALE)

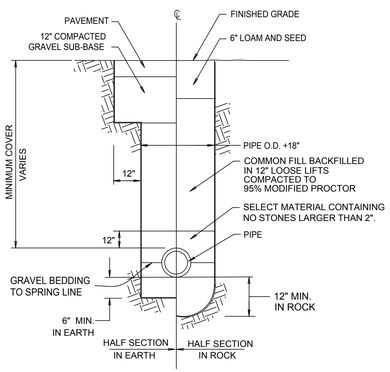


## TRENCH DETAIL
NOT TO SCALE

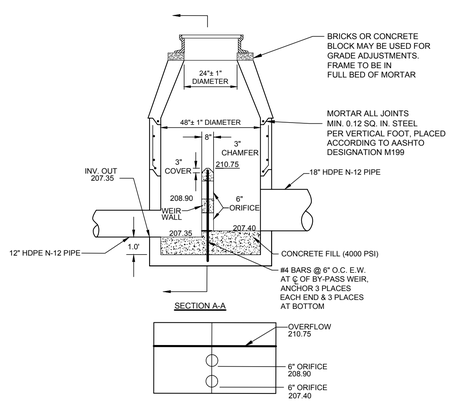


## OUTLET MANHOLE DETAIL
NOT TO SCALE

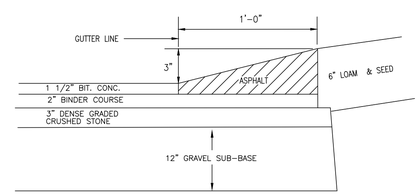


## CAPE COD BERM DETAIL
(NOT TO SCALE)

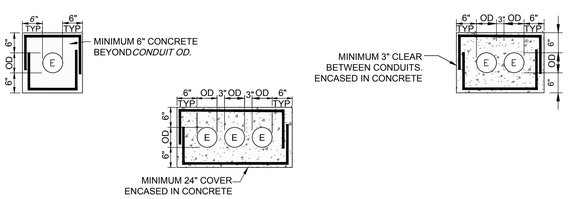


## BURIED ELECTRICAL CONDUIT DETAIL
NOT TO SCALE

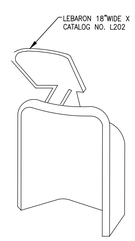


## CATCH BASIN TRAP
NOT TO SCALE

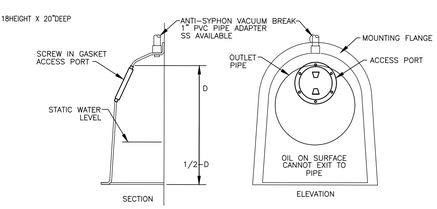


## THE "SNOUT" OIL DEBRIS STOP
NOT TO SCALE

# CONSTRUCTION DETAILS FOR 6 HILL STREET
IN
NORFOLK , MASSACHUSETTS
PREPARED FOR
HE PROPERTIES, LLC.
6 HILL STREET
NORFOLK, MASSACHUSETTS 02056

SCALE: AS NOTED
DATE: JUNE 19, 2019
DRAWN BY: RLW
CHECKED BY: THL, LET
JOB NO. 3239
DWG. NO. 1


TILTON AND ASSOCIATES, INC.
81 John L. Dietsch Boulevard
P.O. Box 467
North Attleborough, MA 02761
Tel: (508)699-4120 Fax: (508)699-7810
Web: www.tilton-assoc.com Email: degs@tilton-assoc.com
LAND SURVEYING, CIVIL ENGINEERING AND ENVIRONMENTAL PERMITTING


COMMONWEALTH OF MASSACHUSETTS — DALE MACKENZIE GUNN — CIVIL — No. 34575 — REGISTERED PROFESSIONAL ENGINEER

COMMONWEALTH OF MASSACHUSETTS — LARRY E. TILTON — No. 27848 — REGISTERED PROFESSIONAL LAND SURVEYOR

REVISIONS:
6-25-2019 – ADJUSTMENTS BASED ON STORMWATER DESIGN
8-5-2019 BETA PEER REVIEW LETTER AND MEETING WITH TOWN PLANNER
8-28-2019 PER BETA REVIEW LETTER
9-26-2019 PER BETA REVIEW LETTER
12-11-2019 PER PLANNING BOARD 10-8-2019 MEETING COMMENTS



G:\Projects\3239\DWGS\PLANSET FOR PLANNING BOARD SUBMISSION 6-25-19\FINAL SET DRAWINGS 12-11-19\3239-SHT 7-Special Permit-12-11-2019-DETAIL SHT 7.dwg, 12/18/2019 11:26:40 AM, DWG To PDF.pc3

NOTES:
1. THIS DRAWING IS A LEDGER SIZE ORIGINAL.
2. DIMENSIONS ARE GENERAL AND INTENDED FOR GUIDANCE ONLY.
3. THE ORIENTATION OF INLET PIPE AND OVERFLOW PIPE CAN BE ADJUSTED TO SITE REQUIREMENTS. SEE SITE PLAN FOR ORIENTATION.
4. INLET PIPE MUST BE TANGENT TO PRECAST MANHOLE I.D. AS SHOWN.
5. OVERFLOW PIPE STUB O.D. MATCHES SDR35 O.D.
6. 304 SS EXPANSION ANCHOR BOLTS TO BE SUPPLIED BY PRECASTER.
7. METRIC DIMENSIONS BASED ON 25.4mm/INCH.

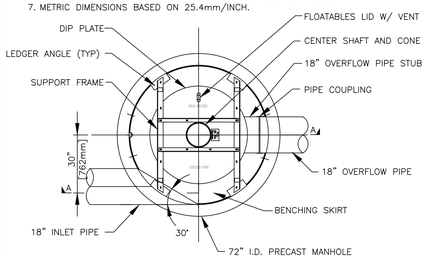


PLAN VIEW

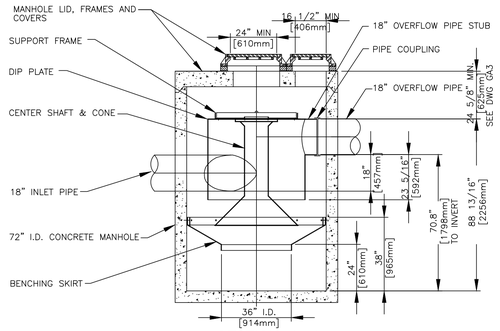


SECTION A–A

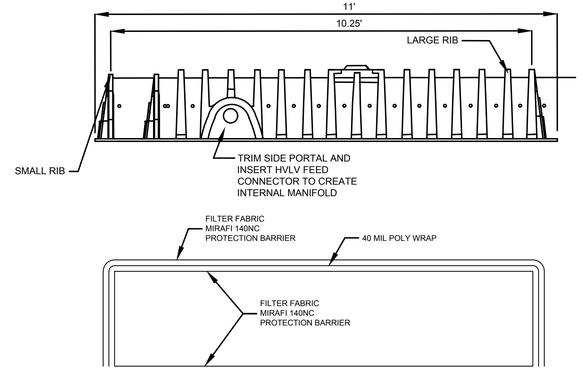


APPROVED BY THE TOWN OF NORFOLK PLANNING BOARD.
DATE :.....
.....
.....
.....
.....
.....
.....
I CERTIFY THAT 20 DAYS HAVE PASSED SINCE PLANNING BOARD APPROVAL AND NO APPEAL HAS BEEN FIELD IN THE OFFICE.
DATE: .....
.....
TOWN CLERK OF NORFOLK

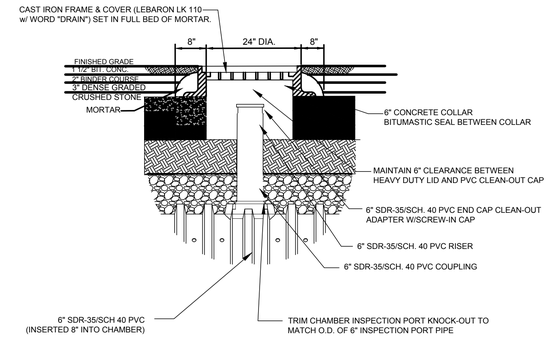


CULTEC INSPECTION PORT DETAIL
NOT TO SCALE

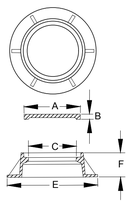


6' Ø HYDRO INTERNATIONAL DOWNSTREAM DEFENDER
(NOT TO SCALE)

| NEENAH MODE | A | B | C | E | F |
|---|---|---|---|---|---|
| R-1792-DL VENTED COVER | 18 1/2 | 1 1/2 | 16 1/2 | 22 1/2 | 4 |
| R-1593-B WITH STANDARD COVER | 26 1/4 | 1 1/8 | 24 | 32 | 4 |

TYPICAL COVER SIZE FOR DOWNSTREAM DEFENDER
(NOT TO SCALE)

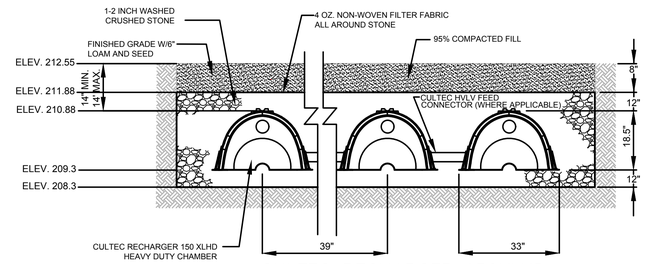


CULTEC RECHARGER 150XLHD
NOT TO SCALE

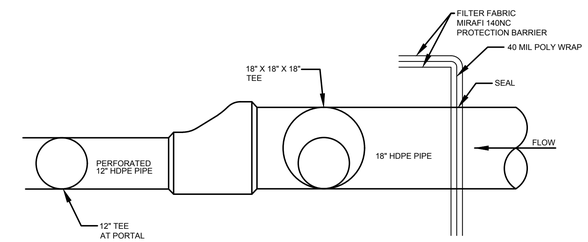


18"–12" ECCENTRIC REDUCER
NOT TO SCALE

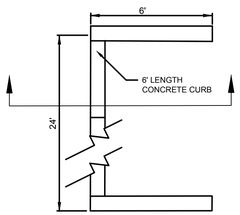


LEVEL SPREADER
NOT TO SCALE

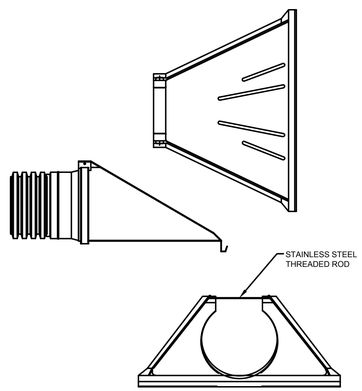


FLARED END DETAIL
NOT TO SCALE

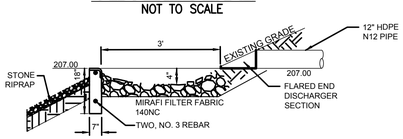


CROSS SECTION LEVEL SPREADER
NOT TO SCALE

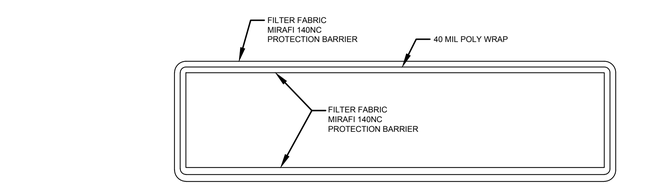


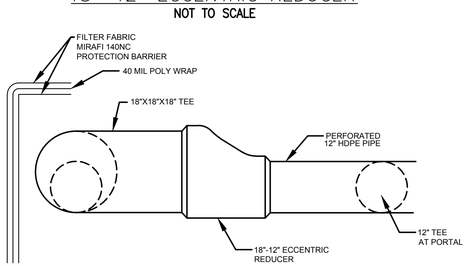


18"–12" ECCENTRIC REDUCER
NOT TO SCALE

CULTEC SYSTEM MANIFOLD INLET AND OUTLET PIPING

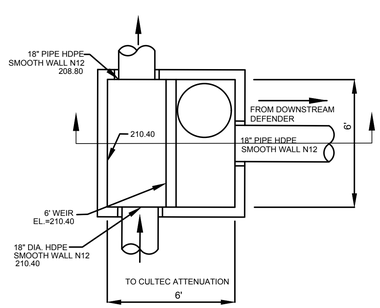


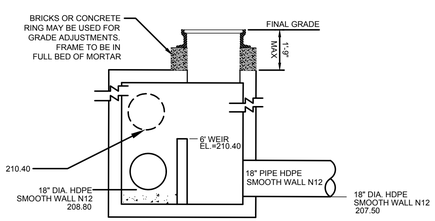


DISTRIBUTION CHAMBER
NOT TO SCALE

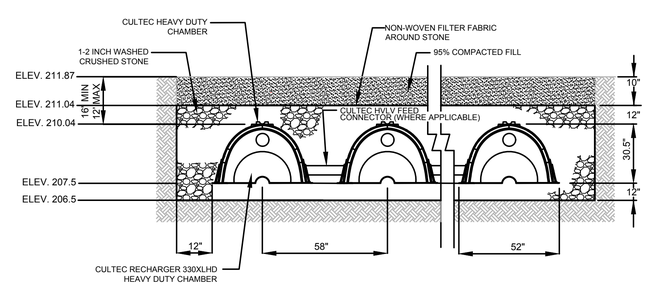


CULTEC ATTENUATION 330XLHD
NOT TO SCALE

SUBSURFACE STORMWATER ATTENUATION SYSTEM

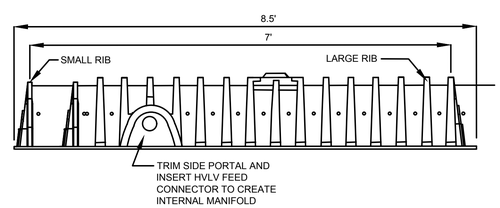


SUBSURFACE STORMWATER RECHARGE SYSTEM

**NOTE:**
**CULTEC NO. 4800 WOVEN GEOTEXILE TO BE PLACED BENEATH INTERNAL MANIFOLD FEATURE AND BENEATH INLET/OUTLET PIPES (FOR SCOUR PROTECTION)**

CONSTRUCTION DETAILS
FOR
6 HILL STREET
IN
NORFOLK, MASSACHUSETTS
PREPARED FOR
HE PROPERTIES, LLC.
6 HILL STREET
NORFOLK, MASSACHUSETTS 02056

SCALE: AS NOTED
DATE: JUNE 19, 2019
DRAWN BY: RLW
CHECKED BY: THL, LET
JOB NO. 3239
DWG. NO. 1

COMMONWEALTH OF MASSACHUSETTS DALE MACNEIL KUNN CIVIL No. 34575 REGISTERED PROFESSIONAL ENGINEER

COMMONWEALTH OF MASSACHUSETTS LARRY E. TILTON No. 29[illegible] REGISTERED PROFESSIONAL LAND SURVEYOR


TILTON AND ASSOCIATES, INC.
81 John L. Dietsch Boulevard
P.O. Box 467
North Attleborough, MA 02761
Tel: (508)699-4120 Fax: (508)699-7810
Web: www.tilton-assoc.com Email: dwgs@tilton-assoc.com
LAND SURVEYING, CIVIL ENGINEERING AND ENVIRONMENTAL PERMITTING


REVISIONS:
6-25-2019 – ADJUSTMENTS BASED ON STORMWATER DESIGN
8-5-2019 BETA PEER REVIEW LETTER AND MEETING WITH TOWN PLANNER
8-28-2019 PER BETA REVIEW LETTER
9-26-2019 PER BETA REVIEW LETTER
12-11-2019 PER PLANNING BOARD 10-8-2019 MEETING COMMENTS



G:\Projects\3239\DWGS\PLANSET FOR PLANNING BOARD SUBMISSION 6-25-19\FINAL SET DRAWING 8-29-2019\3239-SH 8-Special Permit-8-27-2019-DETAIL SHT 8 AFTER REV.dwg, 12/11/2019 3:52:37 PM, DWG To PDF.pc3

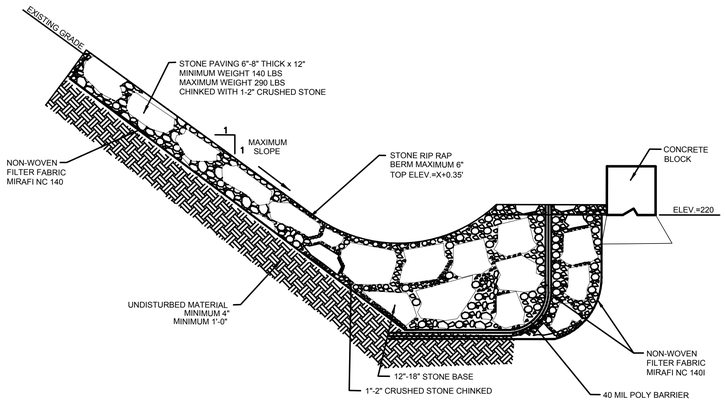


STABILIZED SLOPE DETAIL
BEHIND STONE BIN
NOT TO SCALE

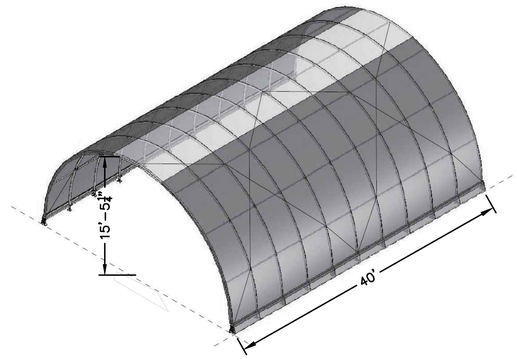


NOTE:
THE "CLEAN SPAN" ALUMINUM POLE/ TUBING CANOPY COVER FOR THE ROAD SALT STORAGE BIN SHALL HAVE DETAIL DRAWINGS PREPARED BY THE CANOPY MANUFACTURER. THESE DRAWINGS SHALL SHOW THE TUBULAR FRAME AND FABRIC REINFORCED CANOPY COVER. CONNECTION ATTACHMENT DETAIL WILL BE PROVIDED ALONG WITH A PARTS LIST, COLOR OF THE CANOPY WILL BE PROVIDED. THESE DRAWINGS WILL BE SPECIFIC FOR THIS LOCATION AND INSTALLATION. THE SITE SPECIFIC DRAWINGS WILL BE PREPARED BY THE ALUMINUM POLE/TUBING CANOPY MANUFACTURER AND MEET ALL REQUIREMENTS OF THE TOWN OF NORFOLK FOR PERMITTING AND CONSTRUCTION.

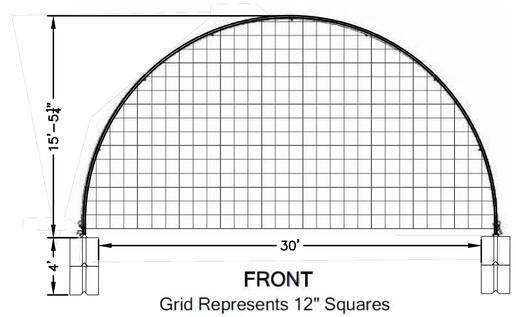


FRONT
Grid Represents 12" Squares

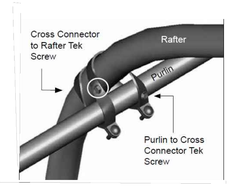


MID RAFTER PURLIN CONNECTION

CLEAN SPAN – ALUMINUM POLE / TUBING CANOPY
NOT TO SCALE

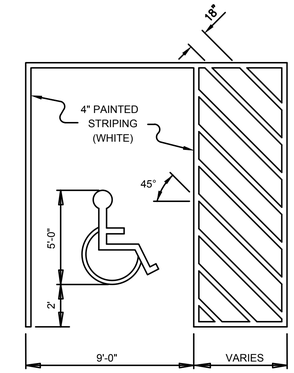


HANDICAPPED PARKING
DETAIL
NOT TO SCALE

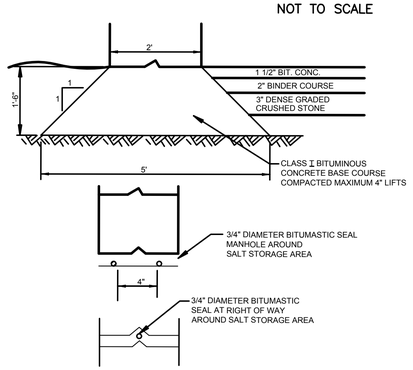


STORAGE BIN BLOCK UNIT BASE
**BASE – PACKED DENSE BINDER**
NOT TO SCALE

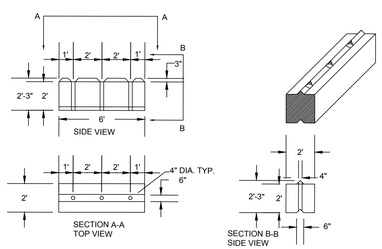


STORAGE BIN BLOCK UNIT
NOT TO SCALE

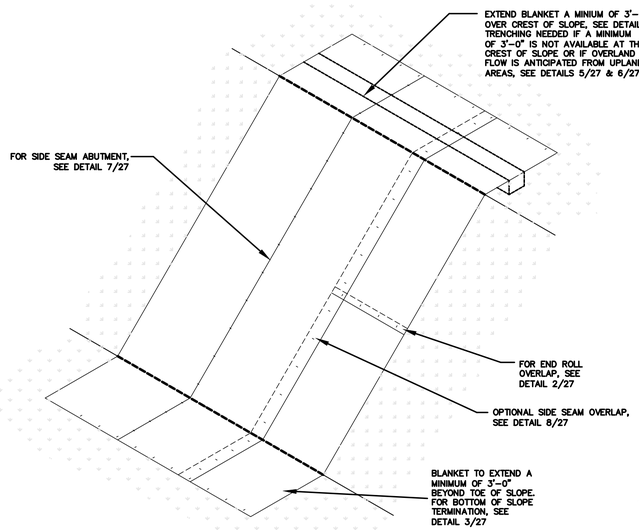


SLOPE DETAIL (1/27)
NO SCALE

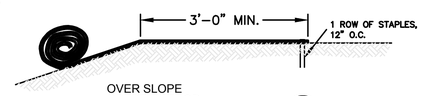


OVER SLOPE
CREST METHOD (4/27)
NO SCALE

DO NOT NEED TO TRENCH BLANKET IF IT CAN BE EXTENDED A MINIMUM OF 3'–0" OVER THE CREST OF THE SLOPE.

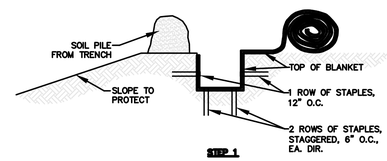


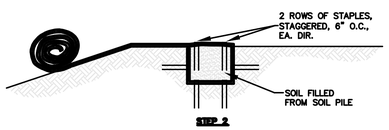


SLOPE TRENCHING
METHOD "A" (5/27)
NO SCALE

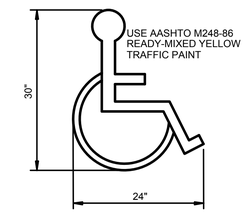


NOTE: HANDICAPPED PARKING SYMBOL SHALL CONFORM WITH CURRENT STATE AND LOCAL CODES AND REGULATIONS.

HANDICAPPED PARKING
SYMBOL DETAIL
NOT TO SCALE

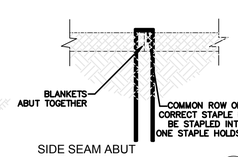


SIDE SEAM ABUT
STAPLE DETAIL (7/27)
NO SCALE

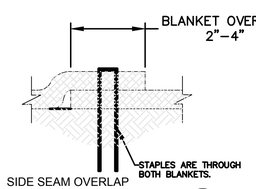


SIDE SEAM OVERLAP
STAPLE DETAIL (8/27)
NO SCALE

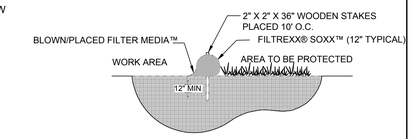


**SECTION** NTS

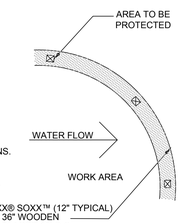


**PLAN** NTS

NOTES:
1. ALL MATERIAL TO MEET FILTREXX® SPECIFICATIONS.
2. FILTER MEDIA™ FILL TO MEET APPLICATION REQUIREMENTS.
3. COMPOST MATERIAL TO BE DISPERSED ON SITE, AS DETERMINED BY ENGINEER.

FILTREXX® SEDIMENT CONTROL DETAIL
NOT TO SCALE

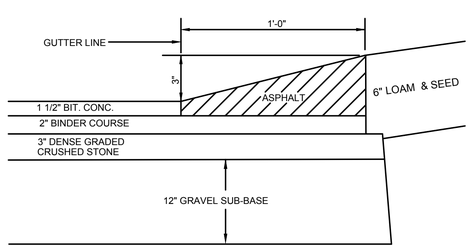


CAPE COD BERM W/PAVEMENT DETAIL
NOT TO SCALE

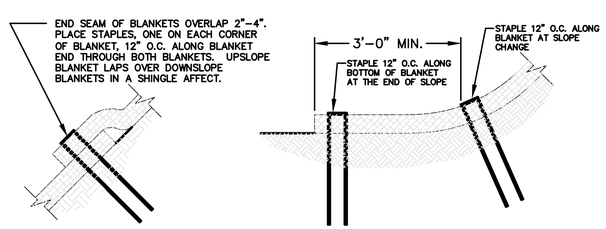


END ROLL OVERLAP (2/27)
NO SCALE




BOTTOM OF SLOPE
TERMINATION (3/27)
NO SCALE

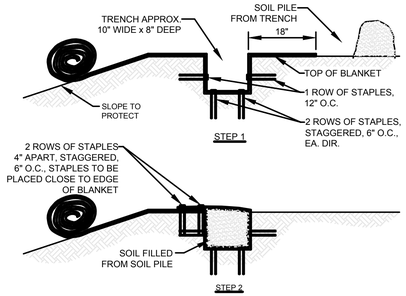


SLOPE TRENCHING
METHOD "B" (6/27)
NO SCALE

NOTE: STAPLE PATTERN TO BE INSTALED PER MANUFACTURER'S GUIDELINE.

EROSION CONTROL BLANKET DETAIL
NOT TO SCALE

CONSTRUCTION DETAILS
FOR
6 HILL STREET
IN
NORFOLK, MASSACHUSETTS
PREPARED FOR
HE PROPERTIES, LLC.
6 HILL STREET
NORFOLK, MASSACHUSETTS 02056

SCALE: AS NOTED
DATE: JUNE 19, 2019
DRAWN BY: RLW
CHECKED BY: THL, LET
JOB NO. 3239
DWG. NO. 1

COMMONWEALTH OF MASSACHUSETTS DALE MACINTOSH CIVIL No. 34575 REGISTERED PROFESSIONAL ENGINEER

COMMONWEALTH OF MASSACHUSETTS LARRY E. TILTON No. 2464 REGISTERED PROFESSIONAL LAND SURVEYOR


TILTON AND ASSOCIATES, INC.
81 John L. Dietsch Boulevard
P.O. Box 467
North Attleborough, MA 02761
Tel: (508)699-4120 Fax: (508)699-7810
Web: www.tilton-assoc.com Email: dwgs@tilton-assoc.com
LAND SURVEYING, CIVIL ENGINEERING AND ENVIRONMENTAL PERMITTING


REVISIONS:
6–25–2019 – ADJUSTMENTS BASED ON STORMWATER DESIGN
8–5–2019 BETA PEER REVIEW LETTER AND MEETING WITH TOWN PLANNER
8–28–2019 PER BETA REVIEW LETTER
9–26–2019 PER BETA REVIEW LETTER
12–11–2019 PER PLANNING BOARD 10–8–2019 MEETING COMMENTS



G:\Projects\3239\DWGS\PLANSET FOR PLANNING BOARD SUBMISSION 6-25-19\FINAL SET DRAWING 8-29-2019\3239-SHT 9-Special Permit-8-27-2019-DETAIL SHT 9.dwg, 12/11/2019 3:54:25 PM, DWG To PDF.pc3