SITE PLAN APPROVAL

7 SHIRE DRIVE
NORFOLK, MASSACHUSETTS

WAIVER REQUESTS

THE SPECIFIC SECTIONS OF THE RULES AND REGULATIONS FROM WHICH WAIVERS ARE REQUESTED AND THE PLANNING BOARD ACTION AND REASONS FOR DENIAL/APPROVAL ARE LISTED BELOW. ALL WAIVERS ARE SUBJECT TO THE CONDITIONS OF APPROVAL, WHICH FOLLOW THIS SECTION.

SECTION 4.10 PEDESTRIAN WAYS/WALKWAYS – IT WAS REQUESTED TO ELIMINATE THE SIDEWALK IN FRONT OF THE LOT.

SECTION 4.19.7.6 SUBSURFACE RECHARGE SYSTEMS – IT WAS REQUESTED TO ELIMINATE THE SUBSURFACE RECHARGE SYSTEM FOR THE BUILDING ROOF AREA AND REPLACE WITH A GRASSED SWALE.

SECTION 5.2.8 SLOPED GRANITE EDGING – IT WAS REQUESTED TO ALLOW CAPE COD BERM FOR CURBING EXCEPT AT THE STREET ENTRANCE WHERE SLOPED GRANITE CURBING WILL BE USED.

SECTION 7.4.3.13.1 & 2 SITE LIGHTING – IT WAS REQUESTED TO ELIMINATE OUTSIDE SITE LIGHTING EXCEPT FOR BUILDING MOUNTED UNITS.

SECTION 7.4.3.16 ALL STORMWATER DRAINAGE SHALL BE CONTAINED ON–SITE – THE EXISTING INDUSTRIAL SUBDIVISION HAS A SHARED DETENTION POND SYSTEM FOR ALL LOTS.

SECTION 7.5.2 TRAFFIC STUDY – IT WAS REQUESTED NOT TO INCLUDE A TRAFFIC STUDY.

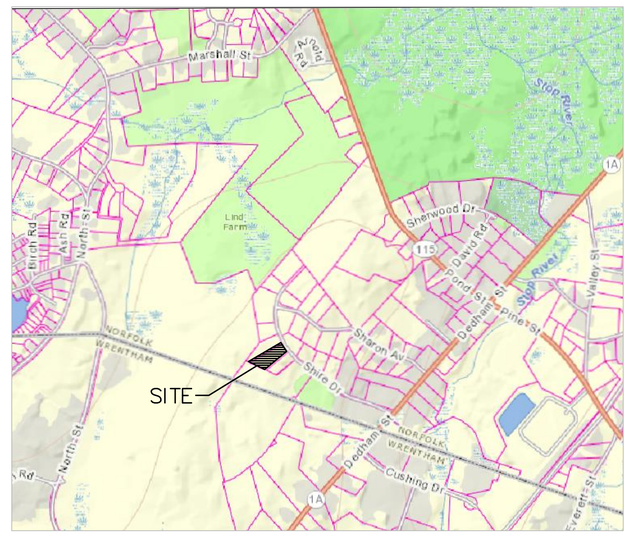

LOCUS MAP
1"=1000

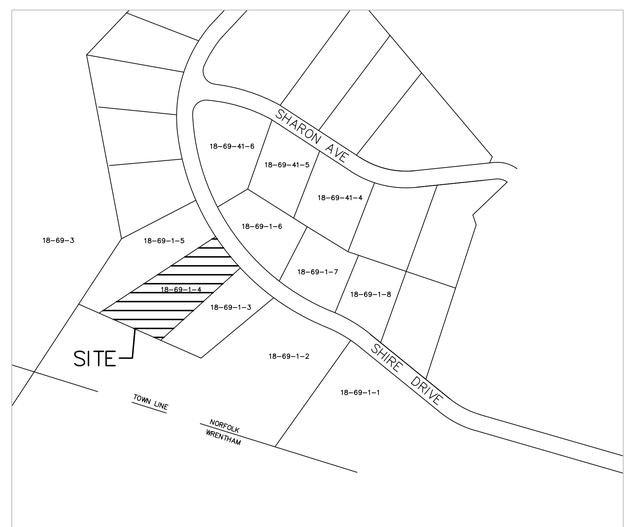

ASSESSORS LOCUS
NOT TO SCALE

OWNER:

JANE & ANTHONY DELUCA
74 ELM STREET
FRANKLIN, MA 02038

APPLICANT:

DELUCA AND SONS EXCAVATING & LANDSCAPING, INC.
74 ELM STREET
FRANKLIN, MA 02038

CIVIL ENGINEER:

CDW CONSULTANTS, INC.
CIVIL & ENVIRONMENTAL ENGINEERS
6 HURON DRIVE
NATICK, MA 01760
TEL. (508) 875-2657 FAX. (508) 875-6617
www.cdwconsultants.com

PROPERTY ADDRESS:

7 SHIRE DRIVE
NORFOLK, MA

ASSESSORS MAP/PARCEL:

MAP 18/ BLOCK 69/ LOT 1–4

ZONING DISTRICT:

C–1 – COMMERCIAL

FEMA DESIGNATION

ZONE C
COMMUNITY PANEL 255217 0005C DATED AUG. 19, 1985

WELLS

THERE ARE NO PRIVATE WELLS WITHIN 200 FEET OF THE PROPERTY AND NO PUBLIC WELLS WITHIN 1000 FEET OF THE PROPERTY

DRAWING LIST:

EC–1.0	EXISTING CONDITIONS SURVEY
C–1.0	DEMOLITION & EROSION CONTROL PLAN
C–2.0	LAYOUT & MATERIALS PLAN
C–3.0	GRADING & DRAINAGE PLAN
C–4.0	UTILITIES PLAN
C–5.0	PLANTING PLAN
C–6.0	DETAILS
C–7.0	DETAILS
C–8.0	DETAILS
C–9.0	DETAILS

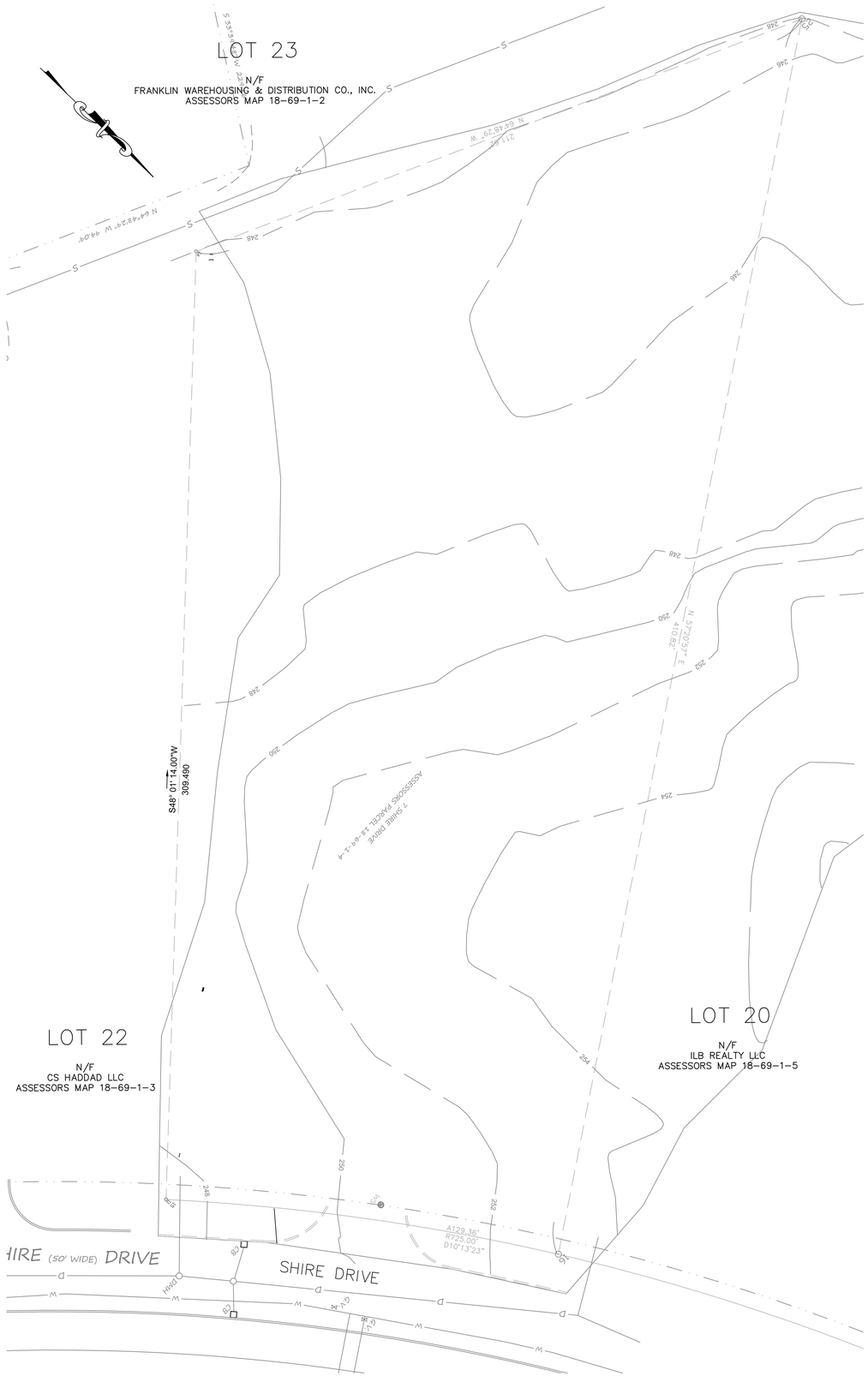

SOURCE:

1. EXISTING TOPOGRAPHY INFORMATION, PROPERTY LINES, LEASE LINES, UTILITY INFORMATION, EDGE OF PAVEMENT AND LOCATIONS OF STRUCTURES WERE TAKEN FROM A PLOT PROVIDED BY COLONIAL SURVEY, OF MEDWAY, MA FOR AN ON THE GROUND TOPOGRAPHICAL SURVEY PERFORMED ON JANUARY 14, 2019.
2. LOCATIONS OF EXISTING PIPES, CONDUITS, UTILITIES, FOUNDATIONS AND OTHER UNDERGROUND OBJECTS ARE NOT WARRANTED TO BE CORRECT AND THE CONTRACTOR SHALL HAVE NO CLAIM ON THAT ACCOUNT SHOULD THEY BE OTHER THAN SHOWN. THE EXACT LOCATION OF EXISTING PIPES, FOUNDATIONS, SITE FEATURES/ANCILLARY ITEMS, SERVICES, ETC..., ARE TO BE FIELD VERIFIED. CONTRACTOR SHALL CONTACT DIGSAFE AND APPROPRIATE AGENCIES/UTILTIES COMPANIES AS NECESSARY.
3. THE CONTRACTOR SHALL CALL DIGSAFE AT 1-888-344-7233 AT LEAST 72 HOURS, SATURDAYS, SUNDAYS, AND HOLIDAYS EXCLUDED, PRIOR TO EXCAVATING AT ANY LOCATION. A COPY OF THE DIG SAFE PROJECT REFERENCE NUMBER(S) SHALL BE GIVEN TO THE OWNER PRIOR TO EXCAVATION.
4. CONTRACTOR SHALL VISIT AND EXAMINE THE SITE TO FULLY UNDERSTAND ALL THE CONDITIONS PERTAINING TO THE WORK, UNDERSTAND DIFFICULTIES TO BE ENCOUNTERED, UNDERSTAND THE SCOPE OF THE DEMOLITION WORK FOR ALL SYSTEMS WHETHER SHOWN OR DESCRIBED AT NO ADDITIONAL COST TO THE OWNER.

NORFOLK PLANNING BOARD

WALTER BYRON, CHAIRMAN

JOHN WEDDLETON, VICE CHAIRMAN

ERIN HUNT, CLERK

GREGG DAMIANO, MEMBER

KEVIN KALKUT, MEMBER

DATE APPROVED

DATE ENDORSED

LEGEND

EXISTING		PROPOSED
100	CONTOUR	100
D	STORM DRAIN PIPE	D
W	WATER LINE	W
E	ELECTRIC MANHOLE	E
UGE	UNDERGROUND ELECTRICAL	UGE
OE	OVERHEAD ELECTRICAL WIRE	OE
G	GAS LINE	G
GG	GAS GATE	GG
S	SANITARY SEWER	S
	HYDRANT	
S	SEWER MANHOLE	S
D	DRAIN MANHOLE	D
	VALVE	
	CATCH BASIN	
	DOUBLE CATCH BASIN	
CCB	CAPE COD BERM	CCB
SGC	SLOPED GRANITE CURB	SGC
VGC	VERTICAL GRANITE CURB	VGC
EOP	EDGE OF PAVEMENT	EOP
429x5	SPOT GRADE	429x5
	LIGHT POLE	
	TREES	
	HANDICAP SPACE	
CLF	CHAIN LINK FENCE	CLF
FF	FINISH FLOOR ELEVATION	FF
LA	LANDSCAPED AREA	LA
	UTILITY POLE	

ABBREVIATIONS

BIT CONC	BITUMINOUS CONCRETE
CONC	CONCRETE
HDPE	HIGH-DENSITY POLYETHYLENE
EOP	EDGE OF PAVEMENT
PVC	POLYVINYL CHLORIDE
RCP	REINFORCED CONCRETE PIPE
RD	ROOF DRAIN
FND	FOUND
N/F	NOW OR FORMERLY
TYP	TYPICAL
CO=	CLEAN OUT
RIM=	RIM ELEVATION
INV=	INVERT ELEVATION
R&D	REMOVE AND DEMOLISH
FE	FLARED END
AD	AREA DRAIN
WQS	WATER QUALITY STRUCTURE
OCS	OUTLET CONTROL STRUCTURE
TW	TOP OF WALL
BW	GRADE AT BOTTOM OF WALL
EOC	EDGE OF CONCRETE
PCC	PRECAST CONCRETE CURB
CCB	CAPE COD BERM

GRAPHIC SCALE

20 0 10 20 40 80

(IN FEET)
1 INCH = 20 FT.

NO	DATE	REVISIONS

SEAL

DATE :	FEB. 15, 2019
DRAWN :	CJS
SCALE :	1"=20'

LOT 21 SHIRE DRIVE

7 SHIRE DRIVE
NORFOLK, MASSACHUSETTS

CDW CONSULTANTS, INC.
CIVIL & ENVIRONMENTAL ENGINEERS
6 HURON DRIVE
NATICK, MA 01760
TEL (508) 875-2657 FAX (508) 875-6617
www.cdwconsultants.com

EXISTING CONDITIONS

EC-1.0

SHEET X OF X

0' 20' 40' 80'

1819.00

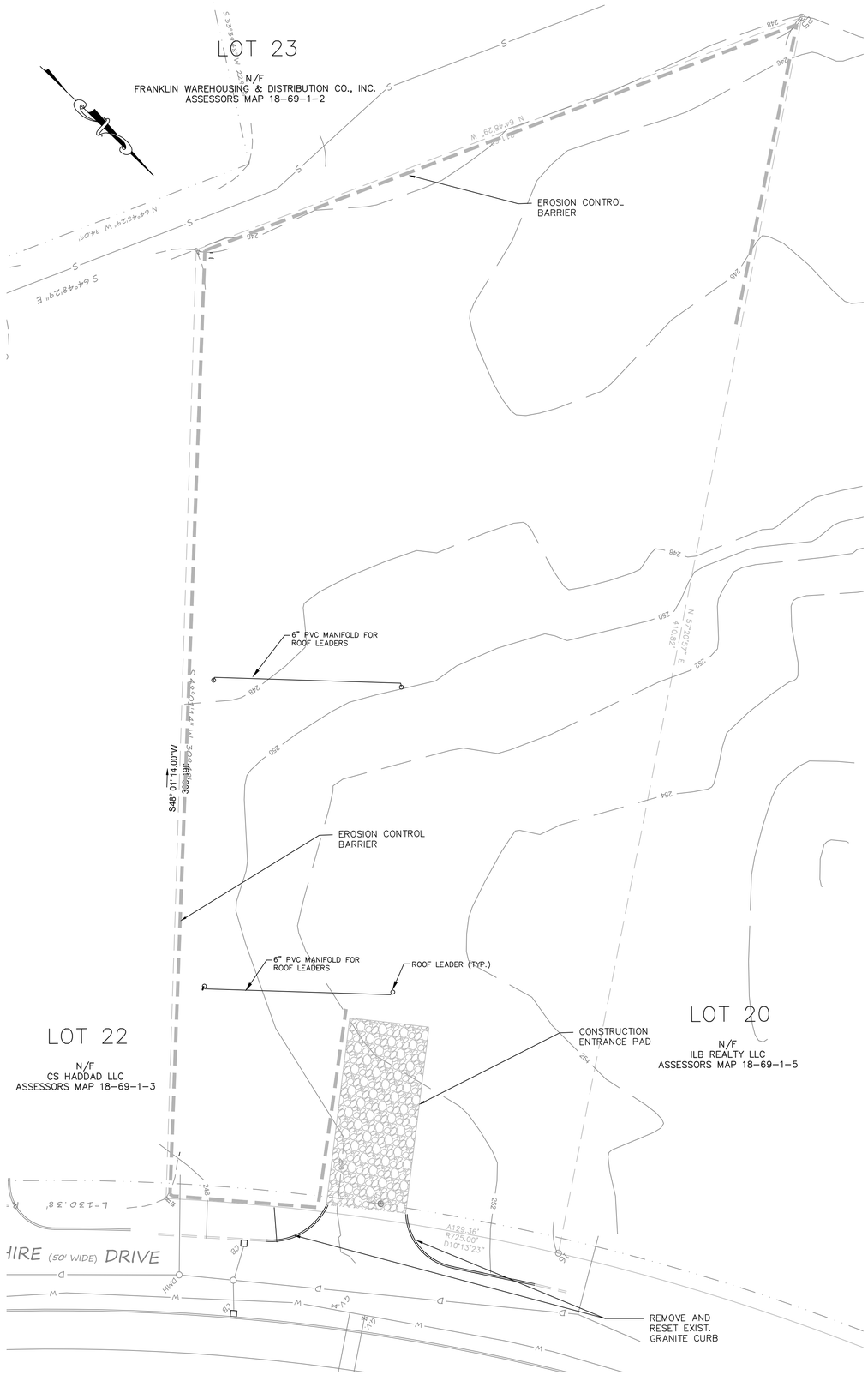

SOURCE:

1. EXISTING TOPOGRAPHY INFORMATION, PROPERTY LINES, LEASE LINES, UTILITY INFORMATION, EDGE OF PAVEMENT AND LOCATIONS OF STRUCTURES WERE TAKEN FROM A PLOT PROVIDED BY COLONIAL SURVEY OF MEDWAY, MA FOR AN ON THE GROUND TOPOGRAPHICAL SURVEY PERFORMED ON JANUARY 14, 2019.
2. LOCATIONS OF EXISTING PIPES, CONDUITS, UTILITIES, FOUNDATIONS AND OTHER UNDERGROUND OBJECTS ARE NOT WARRANTED TO BE CORRECT AND THE CONTRACTOR SHALL HAVE NO CLAIM ON THAT ACCOUNT SHOULD THEY BE OTHER THAN SHOWN. THE EXACT LOCATION OF EXISTING PIPES, FOUNDATIONS, SITE FEATURES/ANCILLARY ITEMS, SERVICES, ETC..., ARE TO BE FIELD VERIFIED. CONTRACTOR SHALL CONTACT DIGSAFE AND APPROPRIATE AGENCIES/UTILITIES COMPANIES AS NECESSARY.
3. THE CONTRACTOR SHALL CALL DIGSAFE AT 1-888-344-7233 AT LEAST 72 HOURS, SATURDAYS, SUNDAYS, AND HOLIDAYS EXCLUDED, PRIOR TO EXCAVATING AT ANY LOCATION. A COPY OF THE DIG SAFE PROJECT REFERENCE NUMBER(S) SHALL BE GIVEN TO THE OWNER PRIOR TO EXCAVATION.
4. CONTRACTOR SHALL VISIT AND EXAMINE THE SITE TO FULLY UNDERSTAND ALL THE CONDITIONS PERTAINING TO THE WORK, UNDERSTAND DIFFICULTIES TO BE ENCOUNTERED, UNDERSTAND THE SCOPE OF THE DEMOLITION WORK FOR ALL SYSTEMS WHETHER SHOWN OR DESCRIBED AT NO ADDITIONAL COST TO THE OWNER.

GENERAL CONSTRUCTION AND DEMOLITION NOTES:

1. EXCEPT AS REQUIRED TO PERFORM SPECIFIC WORK ACTIVITIES RELATED TO UTILITY CONNECTIONS, CONTRACT SHALL CONFINE HIS OPERATIONS INCLUDING ALL STOCKPILES, STORAGE, AND STAGING, TO WITHIN THE LIMIT OF WORK.
2. CONTRACTOR SHALL BE RESPONSIBLE FOR ALL SITE-RELATED DUST CONTROL.
3. THE CONTRACTOR SHALL MAKE ALL NECESSARY APPLICATIONS AND ARRANGEMENTS WITH UTILITIY PROVIDERS FOR TEMPORARY ELECTRICAL SERVICE FOR DEMOLITION/CONSTRUCTION ACTIVITIES. CONTRACTOR SHALL PROVIDE AND PAY FOR ALL TEMPORARY WIRING, SWITCHES, CONNECTIONS, METERS AND SERVICE. CONTRACTOR SHALL REMOVE ALL TEMPORARY EQUIPMENT NOTED ABOVE AFTER COMPLETION OF WORK, THE CONTRACTOR MAY, AT HIS OWN EXPENSE, UTILIZE TEMPORARY GENERATORS TO PROVIDE POWER FOR DEMOLITION/CONSTRUCTION ACTIVITIES.
4. THE CONTRACTOR SHALL PROVIDE TEMPORARY CHAIN LINK CONSTRUCTION FENCE IN ACCORDANCE WITH THE PLANS. PRIOR TO CONSTRUCTION, THE CONTRACTOR SHALL PREPARE A PLAN CONFIRMING THE LOCATION OF THE CONSTRUCTION FENCE, ACCESS GATES AND CONSTRUCTION ENTRANCES, AND ANY APPLICABLE PHASES, FOR APPROVAL BY THE OWNER.
5. THE CONTRACTOR MAY UTILIZE ALL AREAS WITHIN THE LIMIT OF WORK AS A FIELD OFFICE/STAGING AREA.
6. CONTRACTOR SHALL BE RESPONSIBLE FOR WHEEL CLEANING OF ALL CONSTRICTION VEHICLES BEFORE EXISTING THE SITE, ANY TRACKED DIRT FROM CONTRACTOR OR SUBCONTRACTOR VEHICLES ONTO THE ACCESS ROAD OR PUBLIC RIGHTS OF WAY SHALL BE SWEPT UP AT THE CONTRACTORS EXPENSE.
7. THE CONTRACTOR IS ADVISED THAT THE LOCATIONS OF ALL EXISTING UTILITIES ARE APPROXIMATE AND THAT ALL UTILITIES MAY NOT BE SHOWN. PRIOR TO THE START OF CONSTRUCTION AND DEMOLITION ACTIVITIES THE CONTRACTOR SHALL FIELD VERIFY THE LOCATIONS OF ALL EXISTING UTILITIES. THE CONTRACTOR IS RESPONSIBLE FOR ALL DAMAGE TO EXISTING UTILITIES NOT SCHEDULED FOR DEMOLITION.
8. REMOVAL OF ANY WORK OR ITEM SHALL INCLUDE OFFSITE LEGAL DISPOSAL OF SAME. ALL REMOVAL AND DISPOSAL WORK SHALL BE PERFORMED IN A SAFE AND LEGAL MANNER. THE CONTRACTOR'S DISPOSAL PRACTICE OF ANY EXCESS MATERIAL SHALL COMPLY WITH ALL FEDERAL, STATE, AND MUNICIPAL WASTE MANAGEMENT LAWS AND REGULATION.
9. THE CONTRACTOR SHALL RELOCATE ALL ITEMS SCHEDULED TO REMAIN AWAY FROM THE CONSTRUCTION AREA, AND PROTECT AGAINST DUST AND MOISTURE AS NEEDED. FOLLOWING CONSTRUCTION, THE CONTRACTOR SHALL RETURN THESE ITEMS UNDAMAGED TO THEIR ORIGINAL LOCATIONS. ANY ITEM DAMAGED BY THE CONTRACTOR SHALL BE REPLACED IN KIND, AT NO COST TO THE OWNER.
10. LOCATIONS OF INDIVIDUAL EXISTING TREES 12" AND LARGER AND SHRUBS ARE SHOWN FOR REFERENCE ONLY. THE CONTRACTOR SHALL REMOVE TREES, BUSHES, AND OTHER VEGETATION IN THE WORK AREA ONLY AS REQUIRED TO COMPLETE THE NEW WORK AND SHALL MAKE EVERY EFFORT TO MINIMIZE THE AMOUNT OF VEGETATION DISTURBED. THE CONTRACTOR SHALL REPLACE ALL DAMAGED VEGETATION TO REMAIN IN KIND FOLLOWING THE COMPLETION OF THE WORK. PRIOR TO THE START OF CONSTRUCTION, THE CONTRACTOR SHALL FIELD VERIFY THE LOCATION OF ALL TREES AND SHRUBS.
11. THE CONTRACTOR SHALL RESTORE ALL LANDSCAPING AND HARDSCAPING AFFECTED BY THE DEMOLITION AND CONSTRUCTION ACTIVITIES IN KIND. THE CONTRACTOR SHALL PROVIDE TREE PROTECTION AS SPECIFIED IN THE DETAILS FOR ALL TREES TO BE PRESERVED IN THE WORK AREA.
12. THE CONTRACTOR IS ADVISED TO DISTURB VEGETATION AND PAVEMENT AS LITTLE AS POSSIBLE.
13. ANY ITEM OR STRUCTURE DAMAGED BEYOND THE LIMITS OF WORK SHALL BE REPLACED IN KIND BY THE CONTRACTOR, AT HIS OWN EXPENSE.
14. EXISTING STRUCTURES, LANDSCAPING, AND HARDSCAPING ARE PRESENT IN AND BEYOND THE LIMITS OF WORK BUT NOT NECESSARILY SHOWN HEREON. THE CONTRACTOR SHALL PROTECT ALL EXISTING FEATURES IN PLACE DURING THE ENTIRE DURATION OF THE PROJECT. OR IF ACCEPTABLE TO THE OWNER, HARDSCAPE ITEMS SUCH AS FENCES AND GUARDRAILS MAY BE REMOVED AND RESET, WITHOUT DAMAGE. THE CONTRACTOR IS RESPONSIBLE FOR ANY DAMAGES.
15. CONTRACTOR TO PROTECT EXISTING SIGNS TO REMAIN, OR IF ACCEPTABLE TO THE OWNER, SIGNS MAY BE REMOVED AND RESET, WITHOUT DAMAGE, AFTER CONSTRUCTION. THE CONTRACTOR IS RESPONSIBLE FOR ANY DAMAGES. ADDITIONALLY, ALL EXISTING LIGHT POLES AND FLAG POLES SHALL BE PROTECTED DURING CONSTRUCTION, UNLESS OTHERWISE NOTED ON THE DRAWINGS.
16. ALL MATERIALS STOCKPILED DURING THE WORK SHALL BE PLACED IN A LOCATION THAT PREVENTS EROSION AND SEDIMENTATION. THE CONTRACTOR SHALL STOCKPILE MATERIALS IN AN AREA ON-SITE.
17. ALL CONSTRUCTION ACTIVITIES SHALL CONFORM TO STATE AND LOCAL REQUIREMENTS, INCLUDING BUT NOT LIMITED TO THE TOWN OF NORFOLK, THE COMMONWEALTH OF MASSACHUSETTS, AND ANY OTHER AGENCIES HAVING JURISDICTION.
18. ALL EXISTING UTILITIES SHALL REMAIN IN SERVICE DURING DEMOLITION AND CONSTRUCTION AT ALL TIMES, UNLESS PRIOR APPROVAL IS GIVEN BY THE TOWN AND/OR THE OWNER. INCLUDING ALL EXISTING UTILITIES/SERVICES ASSOCIATED WITH THE EXISTING BUILDINGS. IF A UTILITY IS DAMAGED, TEMPORARY SERVICE MAY BE REQUIRED BY THE CONTRACTOR, AT HIS OWN EXPENSE.
19. AN EROSION CONTROL BARRIER SHALL BE INSTALLED ALONG THE LIMITS OF THE DEVELOPMENT AS INDICATED ON THE PLANS PRIOR TO THE COMMENCEMENT OF DEMOLITION OR CONSTRUCTION OPERATIONS. CONTRACTOR SHALL INSTALL SILT SACKS ON DOWNSTREAM CATCH BASINS AS INDICATED ON THE PLANS. PRIOR TO INSTALLING SILT SACKS THE CONTRACTOR SHALL CLEAN OUT THE SUMPS OF THE CATCH BASINS. THE EROSION CONTROL AS SHOWN IS A MINIMUM REQUIREMENT, ADDITIONAL EROSION CONTROL MEASURES MAY BE REQUIRED AS CONDITIONS WARRANT.

NORFOLK PLANNING BOARD

WALTER BYRON, CHAIRMAN

JOHN WEDDLETON, VICE CHAIRMAN

ERIN HUNT, CLERK

GREGG DAMIANO, MEMBER

KEVIN KALKUT, MEMBER

DATE APPROVED

DATE ENDORSED

LEGEND

EXISTING		PROPOSED
100	CONTOUR	100
D	STORM DRAIN PIPE	D
W	WATER LINE	W
E	ELECTRIC MANHOLE	E
UGE	UNDERGROUND ELECTRICAL	UGE
OE	OVERHEAD ELECTRICAL WIRE	OE
G	GAS LINE	G
GG	GAS GATE	GG
S	SANITARY SEWER	S
	HYDRANT	
S	SEWER MANHOLE	S
D	DRAIN MANHOLE	D
	VALVE	
	CATCH BASIN	
	DOUBLE CATCH BASIN	
CCB	CAPE COD BERM	CCB
SGC	SLOPED GRANITE CURB	SGC
VGC	VERTICAL GRANITE CURB	VGC
EOP	EDGE OF PAVEMENT	EOP
429x5	SPOT GRADE	429x5
	LIGHT POLE	
	TREES	
	HANDICAP SPACE	
CLF	CHAIN LINK FENCE	CLF
FF	FINISH FLOOR ELEVATION	FF
LA	LANDSCAPED AREA	LA
	UTILITY POLE	

ABBREVIATIONS

BIT CONC	BITUMINOUS CONCRETE
CONC	CONCRETE
HDPE	HIGH-DENSITY POLYETHYLENE
EOP	EDGE OF PAVEMENT
PVC	POLYVINYL CHLORIDE
RCP	REINFORCED CONCRETE PIPE
RD	ROOF DRAIN
FND	FOUND
N/F	NOW OR FORMERLY
TYP	TYPICAL
CO=	CLEAN OUT
RIM=	RIM ELEVATION
INV=	INVERT ELEVATION
R&D	REMOVE AND DEMOLISH
FE	FLARED END
AD	AREA DRAIN
WQS	WATER QUALITY STRUCTURE
OCS	OUTLET CONTROL STRUCTURE
TW	TOP OF WALL
BW	GRADE AT BOTTOM OF WALL
EOC	EDGE OF CONCRETE
PCC	PRECAST CONCRETE CURB
CCB	CAPE COD BERM

GRAPHIC SCALE

20 0 10 20 40 80

(IN FEET)
1 INCH = 20 FT.

NO	DATE	REVISIONS

SEAL

COMMONWEALTH OF MASSACHUSETTS
ERIC S. WILHELMSEN
CIVIL
No. 41596
REGISTERED PROFESSIONAL ENGINEER
2/19/19

DATE :	FEB. 15, 2019
DRAWN :	CJS
SCALE :	1"=20'

LOT 21 SHIRE DRIVE

7 SHIRE DRIVE
NORFOLK, MASSACHUSETTS

CDW CONSULTANTS, INC.
CIVIL & ENVIRONMENTAL ENGINEERS
6 HURON DRIVE
NATICK, MA 01760
TEL. (508) 875-2657 FAX. (508) 875-6617
www.cdwconsultants.com

LAYOUT & MATERIALS

C-1.0

SHEET X OF X

0' 20' 40' 80'

1819.00

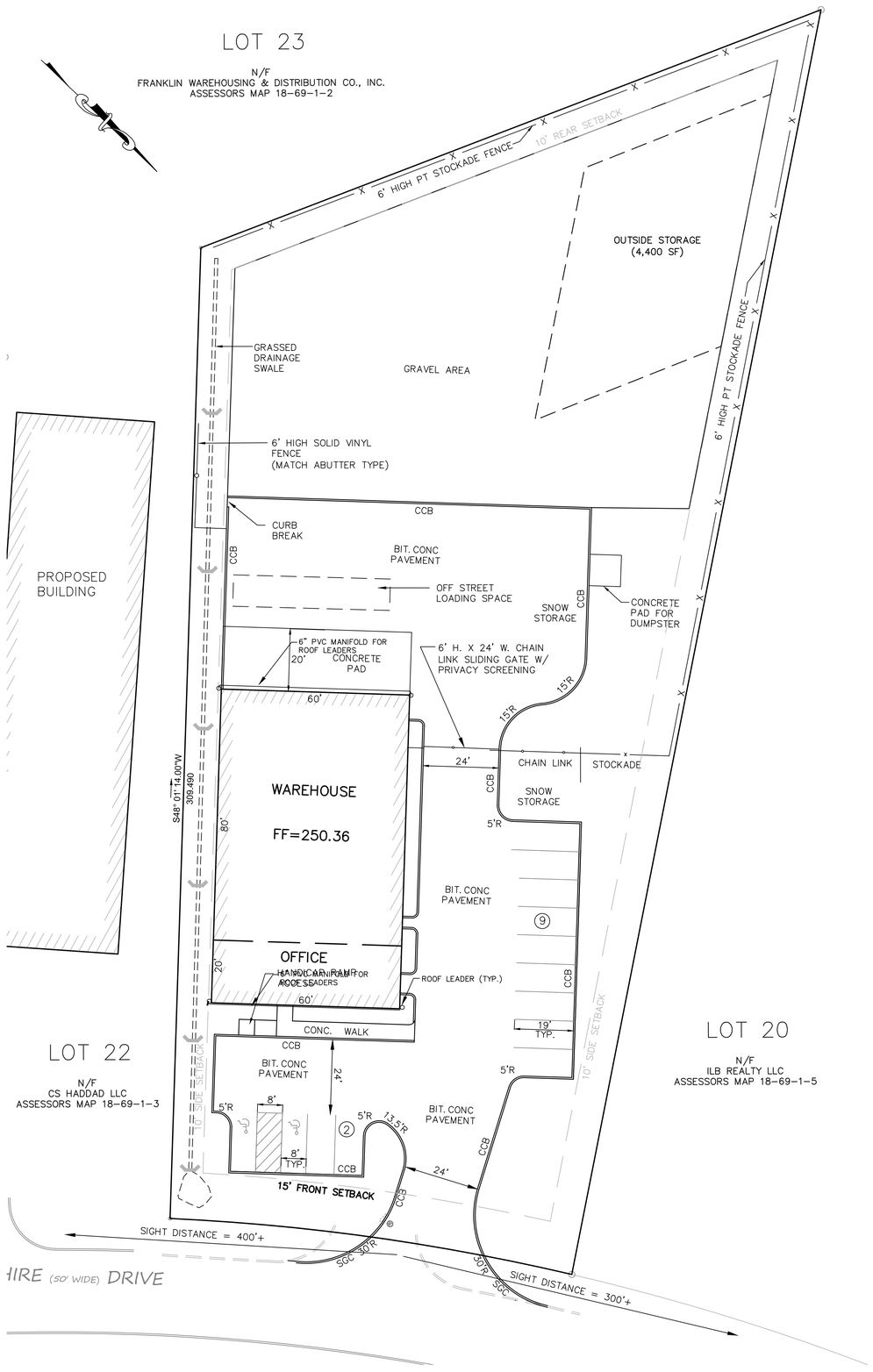

LEGEND

EXISTING		PROPOSED
100	CONTOUR	100
D	STORM DRAIN PIPE	D
W	WATER LINE	W
E	ELECTRIC MANHOLE	E
UGE	UNDERGROUND ELECTRICAL	UGE
OE	OVERHEAD ELECTRICAL WIRE	OE
G	GAS LINE	G
GG	GAS GATE	GG
S	SANITARY SEWER	S
	HYDRANT	
S	SEWER MANHOLE	S
D	DRAIN MANHOLE	D
	VALVE	
	CATCH BASIN	
	DOUBLE CATCH BASIN	
CCB	CAPE COD BERM	CCB
SGC	SLOPED GRANITE CURB	SGC
VGC	VERTICAL GRANITE CURB	VGC
EOP	EDGE OF PAVEMENT	EOP
429x5	SPOT GRADE	429x5
	LIGHT POLE	
	TREES	
	HANDICAP SPACE	
CLF	CHAIN LINK FENCE	CLF
FF	FINISH FLOOR ELEVATION	FF
LA	LANDSCAPED AREA	LA
	UTILITY POLE	

ABBREVIATIONS

BIT CONC	BITUMINOUS CONCRETE
CONC	CONCRETE
HDPE	HIGH-DENSITY POLYETHYLENE
EOP	EDGE OF PAVEMENT
PVC	POLYVINYL CHLORIDE
RCP	REINFORCED CONCRETE PIPE
RD	ROOF DRAIN
FND	FOUND
N/F	NOW OR FORMERLY
TYP	TYPICAL
CO=	CLEAN OUT
RIM=	RIM ELEVATION
INV=	INVERT ELEVATION
R&D	REMOVE AND DEMOLISH
FE	FLARED END
AD	AREA DRAIN
WQS	WATER QUALITY STRUCTURE
OCS	OUTLET CONTROL STRUCTURE
TW	TOP OF WALL
BW	GRADE AT BOTTOM OF WALL
EOC	EDGE OF CONCRETE
PCC	PRECAST CONCRETE CURB
CCB	CAPE COD BERM

NORFOLK PLANNING BOARD

WALTER BYRON, CHAIRMAN

JOHN WEDDLETON, VICE CHAIRMAN

ERIN HUNT, CLERK

GREGG DAMIANO, MEMBER

KEVIN KALKUT, MEMBER

DATE APPROVED

DATE ENDORSED

LAYOUT AND MATERIALS NOTES

1. ALL LINES AND DIMENSIONS ARE PARALLEL OR PERPENDICULAR TO THE LINES FROM WHICH THEY ARE MEASURED UNLESS OTHERWISE INDICATED.
2. REFER TO MEP PLANS FOR SITE LIGHTING LOCATIONS AND DETAILS.
3. CONTRACTOR SHALL REPORT SIGNIFICANT CONFLICTS TO THE OWNER AND THE ENGINEER FOR RESOLUTION.
4. DIMENSIONS OF PARKING SPACES AND DRIVEWAYS ARE FROM FACE OF CURB TO FACE OF CURB. STANDARD PARKING SPACES ARE 9'x19', UNLESS OTHERWISE NOTED ALL HANDICAP SPACES ARE 8'x19'.
5. DIMENSIONS FROM BUILDING ARE FROM FACE OF BUILDING. CONTRACTOR SHALL VERIFY ALL CONDITIONS IN THE FIELD AND REPORT ANY DISCREPANCIES TO THE ENGINEER. THE CONTRACTOR SHALL STAKE OUT BUILDING FROM THE LATEST ARCHITECTURAL DRAWINGS.
6. THE CONTRACTOR SHALL NOTIFY THE ENGINEER OF ANY DISCREPANCIES BETWEEN SITE PLAN DIMENSIONS AND BUILDING PLANS BEFORE PROCEEDING WITH ANY PORTION OF SITE WORK WHICH MAY BE AFFECTED SO THAT PROPER ADJUSTMENTS TO THE SITE LAYOUT CAN BE MADE IF NECESSARY.
7. SEE ARCHITECTURAL DRAWINGS FOR EXACT BUILDING DIMENSIONS AND ALL DETAILS CONTIGUOUS TO THE BUILDING, LIGHTING, ENTRANCES, DOORWAY PADS, LOADING DOCK DETAILS, ETC.
8. ACCESSIBLE RAMPS SHALL BE PER MASSACHUSETTS STATE CODE AND THE AMERICANS WITH DISABILITIES ACT (ADA) ACCESSIBILITY GUIDELINES (WHICHEVER IS MORE STRINGENT).
9. EACH HANDICAP PARKING SPACE SHALL BE PROVIDED WITH A SIGN SIX (6) FEET IN HEIGHT LOCATED AT THE BACK OF THE THE CURB. THE SIGN SHALL CONTAIN THE INTERNATIONAL SYMBOL OF ACCESSIBILITY AS DESCRIBED IN THE AMERICANS WITH DISABILITIES ACT, PUBLIC LAW 101-336, (SEE DETAILS).
10. PROTECT EXISTING PROPERTY MONUMENTS AND ABUTTING PROPERTIES DURING CONSTRUCTION ACTIVITIES.
11. ALL SITE CONSTRUCTION SHALL BE IN CONFORMANCE WITH THE MASSACHUSETTS DEPARTMENT OF PUBLIC WORKS (DPW) STANDARD SPECIFICATIONS FOR HIGHWAYS AND BRIDGES, AND THE TOWN OF NORFOLK PUBLIC WORKS.
12. THE CONTRACTOR SHALL BE RESPONSIBLE FOR THE LEGAL REMOVAL AND DISPOSAL OF ALL DEBRIS FROM THE SITE AND AS MAY BE DIRECTED BY THE A/E.
13. ALL FENCING AND GATES SHALL BE INSTALLED IN ACCORDANCE WITH THE MANUFACTURERS DIRECTION.
14. THE SITE CONTRACTOR SHALL CUT AND MATCH ALL EXISTING ROAD PAVEMENT AS REQUIRED TO SET NEW CURBING AND CONSTRUCT NEW UTILITIES IN THE STREET.
15. THE MAXIMUM SIZE VEHICLE ANTICIPATED ON THE SITE IS A TRACTOR TRAILER AASHTO 2011 WB-67 WITH A LENGTH OF 73.5 FEET AND A WIDTH OF 8.5 FEET.
16. DUMPSTER PAD TO HOLD 6 YARD DUMPSTER WITH APPROXIMATE DIMENSIONS OF 6' L. X 6' W. X 5.5' H.

ZONING BY-LAW REQUIREMENTS

ZONING DISTRICT: COMMERCIAL C-1
USE: WHOLESALE/INDUSTRIAL

	REQUIRED	PROPOSED
MIN. LOT AREA	8,000 S.F.	56,428 SF
MIN. LOT FRONTAGE	40'	129.36'
FRONT YARD SETBACK	15'	69'±
SIDE YARD SETBACK	10'	11'±
REAR YARD SETBACK	10'	140'±
MAX. BLDG/LOT COVERAGE	80%	41.8%
BUILDING FLOOR AREA(SF)		6,000 S.F.
MAX. BUILDING HEIGHT	40'	28'
PARKING REQUIREMENTS	REQUIRED	PROVIDED
USE: OFFICE (353 S.F. USABLE) 1 SPACE / 300 S.F.	2	2
USE: WAREHOUSE (4,447± S.F. USABLE) 1 SPACE / 500 S.F.	9	9
HANDICAP SPACES	2	2
TOTAL SPACES	13	13
INTERIOR LANDSCAPING	5,174 SF	14,030 SF

GRAPHIC SCALE

20 0 10 20 40 80

(IN FEET)
1 INCH = 20 FT.

NO	DATE	REVISIONS

SEAL

COMMONWEALTH OF MASSACHUSETTS
ERIC S. WILHELMSEN
CIVIL
No. 41596
REGISTERED PROFESSIONAL ENGINEER
2/19/19

DATE : FEB. 15, 2019
DRAWN : CJS
SCALE : 1"=20'

LOT 21 SHIRE DRIVE

7 SHIRE DRIVE
NORFOLK, MASSACHUSETTS

CDW CONSULTANTS, INC.
CIVIL & ENVIRONMENTAL ENGINEERS
6 HURON DRIVE
NATICK, MA 01760
TEL. (508) 875-2657 FAX. (508) 875-6617
www.cdwconsultants.com

LAYOUT & MATERIALS

C-2.0

SHEET X OF X

0' 20' 40' 80'

1819.00

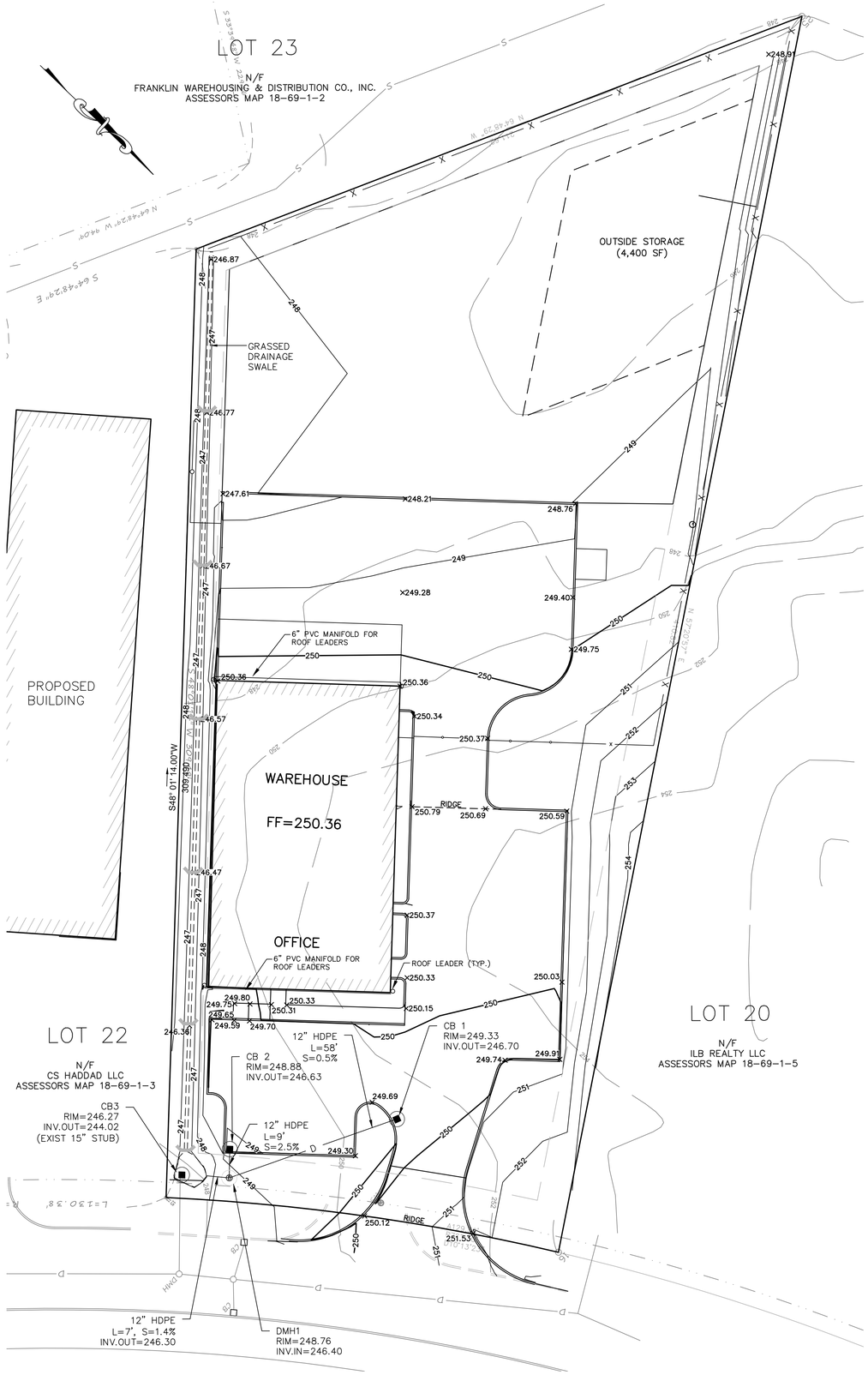

SOURCE:

1. EXISTING TOPOGRAPHY INFORMATION, PROPERTY LINES, LEASE LINES, UTILITY INFORMATION, EDGE OF PAVEMENT AND LOCATIONS OF STRUCTURES WERE TAKEN FROM A PLAN PROVIDED BY ALPHA SURVEY GROUP ENTITLED "EXISTING CONDITIONS SURVEY 5 SHIRE DRIVE NORFOLK, MA, DATED OCTOBER 2, 2018.
2. LOCATIONS OF EXISTING PIPES, CONDUITS, UTILITIES, FOUNDATIONS AND OTHER UNDERGROUND OBJECTS ARE NOT WARRANTED TO BE CORRECT AND THE CONTRACTOR SHALL HAVE NO CLAIM ON THAT ACCOUNT SHOULD THEY BE OTHER THAN SHOWN. THE EXACT LOCATION OF EXISTING PIPES, FOUNDATIONS, SITE FEATURES/ANCILLARY ITEMS, SERVICES, ETC..., ARE TO BE FIELD VERIFIED. CONTRACTOR SHALL CONTACT DIGSAFE AND APPROPRIATE AGENCIES/UTILITIES COMPANIES AS NECESSARY.
3. THE CONTRACTOR SHALL CALL DIGSAFE AT 1-888-344-7233 AT LEAST 72 HOURS, SATURDAYS, SUNDAYS, AND HOLIDAYS EXCLUDED, PRIOR TO EXCAVATING AT ANY LOCATION. A COPY OF THE DIG SAFE PROJECT REFERENCE NUMBER(S) SHALL BE GIVEN TO THE OWNER PRIOR TO EXCAVATION.
4. CONTRACTOR SHALL VISIT AND EXAMINE THE SITE TO FULLY UNDERSTAND ALL THE CONDITIONS PERTAINING TO THE WORK, UNDERSTAND DIFFICULTIES TO BE ENCOUNTERED, UNDERSTAND THE SCOPE OF THE DEMOLITION WORK FOR ALL SYSTEMS WHETHER SHOWN OR DESCRIBED AT NO ADDITIONAL COST TO THE OWNER.

GRADING AND DRAINAGE NOTES

1. ALL SITE WORK SHALL MEET OR EXCEED ANY SITE WORK SPECIFICATIONS PREPARED FOR THIS PROJECT. THE CONTRACTOR SHALL BE RESPONSIBLE FOR VERIFYING THAT THE PROPOSED IMPROVEMENTS SHOWN ON THE PLANS DO NOT CONFLICT WITH ANY KNOWN EXISTING OR OTHER PROPOSED IMPROVEMENTS. IF ANY CONFLICTS ARE DISCOVERED, THE CONTRACTOR SHALL NOTIFY OWNER AND THE DESIGNER PRIOR TO ANY SITE WORK WHICH WOULD BE AFFECTED.
2. ALL DRAINAGE PIPES SHALL BE HDPE PIPE, EXCEPT WHERE NOTED OTHERWISE.
3. ALL EXCESS EXCAVATED MATERIAL SHALL BE REMOVED FROM THE SITE BY THE CONTRACTOR AT NO ADDITIONAL COST TO THE OWNER.
4. ALL SITE CONSTRUCTION SHALL BE IN CONFORMANCE WITH THE MASSACHUSETTS DEPARTMENT OF PUBLIC WORKS (DPW) STANDARD SPECIFICATIONS FOR HIGHWAYS AND BRIDGES, AND THE TOWN OF NORFOLK PUBLIC WORKS.
5. CONTRACTOR SHALL GRADE AND CONSTRUCT ALL ACCESSIBLE HANDICAP RAMPS IN ACCORDANCE WITH THE MASSACHUSETTS STATE CODE AND THE AMERICANS WITH DISABILITIES ACT (ADA) ACCESSIBILITY GUIDELINES (WHICHEVER IS MORE STRINGENT). SEE CONSTRUCTION DETAILS FOR SLOPE AND DIMENSIONAL REQUIREMENTS.
6. AN EROSION CONTROL BARRIER SHALL BE INSTALLED ALONG THE EDGE OF PROPOSED DEVELOPMENT AS SHOWN ON THE PLAN PRIOR TO THE COMMENCEMENT OF CONSTRUCTION OPERATIONS.
7. CONTRACTOR SHALL INSTALL SILT SACKS ON DOWN STREAM CATCH BASINS AS INDICATED ON THE PLANS. PRIOR TO INSTALLING A SILT SACK THE CONTRACTOR SHALL CLEAN OUT THE SUMP OF THE CATCH BASIN.
8. THE CONTRACTOR SHALL VERIFY EXISTING GRADES IN THE FIELD AND REPORT ANY DISCREPANCIES IMMEDIATELY TO THE DESIGNER. THE CONTRACTOR SHALL MAKE ALL ARRANGEMENTS FOR THE ALTERATION AND ADJUSTMENT OF GAS, ELECTRIC, TELEPHONE AND ANY OTHER PRIVATE UTILITIES BY THE UTILITY COMPANIES, AS REQUIRED. WHERE AN EXISTING UTILITY IS FOUND TO CONFLICT WITH THE PROPOSED WORK, THE LOCATION, ELEVATION AND SIZE OF THE UTILITY SHALL BE ACCURATELY DETERMINED WITHOUT DELAY BY THE CONTRACTOR, AND THE INFORMATION FURNISHED TO THE OWNER AND ENGINEER FOR RESOLUTION.
9. CONTRACTOR SHALL PROTECT ALL UNDERGROUND DRAINAGE, SEWER AND UTILITY FACILITIES FROM EXCESSIVE VEHICULAR LOADS DURING CONSTRUCTION. ANY DAMAGE TO THESE FACILITIES RESULTING FROM CONSTRUCTION LOADS WILL BE RESTORED TO ORIGINAL CONDITION.
10. EXCAVATION REQUIRED WITHIN THE PROXIMITY OF EXISTING UTILITY LINES SHALL BE DONE BY HAND. CONTRACTOR SHALL REPAIR ANY DAMAGE TO EXISTING UTILITY LINES OR STRUCTURES INCURRED DURING CONSTRUCTION OPERATIONS AT NO COST TO THE OWNER.
11. ALL UTILITY COVERS, GRATES, ETC. TO REMAIN SHALL BE ADJUSTED TO BE FLUSH WITH THE FINISH GRADE UNLESS OTHERWISE NOTED. RIM ELEVATIONS FOR STRUCTURES AND MANHOLES ARE APPROXIMATE.
12. AT ALL LOCATIONS WHERE EXISTING CURBING OR PAVEMENT ABUTS NEW CONSTRUCTION, THE EDGE OF THE EXISTING CURB OR PAVEMENT SHALL BE SAW CUT TO A CLEAN, SMOOTH EDGE. BLEND NEW PAVEMENT, CURBS AND EARTHWORK SMOOTHLY INTO EXISTING BY MATCHING LINES, GRADES AND JOINTS.
13. PITCH EVENLY BETWEEN SPOT GRADES. GRADE ALL AREAS TO DRAIN.
14. THE CONTRACTOR SHALL SCHEDULE HIS WORK TO ALLOW THE FINISHED SUBGRADE ELEVATIONS TO DRAIN PROPERLY WITHOUT PUDDLING. SPECIFICALLY, ALLOW WATER TO ESCAPE WHERE PROPOSED CURB MAY RETAIN RUNOFF PRIOR TO APPLICATION OF THE FINISH SUBGRADE. PROVIDE TEMPORARY POSITIVE DRAINAGE AS REQUIRED.
15. EXISTING TREES AND SHRUBS OUTSIDE THE LIMITS OF GRADING SHALL BE REMOVED ONLY UPON PRIOR APPROVAL OF THE OWNER.
16. THE CONTRACTOR SHALL REMOVE ALL EROSION CONTROL BARRIERS AFTER REVEGETATION OF DISTURBED AREAS AND AFTER APPROVAL OF THE DESIGNER AND OWNER. SEE ADDITIONAL EROSION CONTROL NOTES ON DEMOLITION SHEET C-100 AND DETAIL SHEET C-500.

ROOF RUNOFF FOR INFILTRATION:

ROOF AREA = 100' X 60' = 6,000 CF

USING 1 INCH STORM FOR ROOF RUNOFF:
6,000 CF X $\frac{1}{12}$ FT. = 500 CF

EARTH REMOVAL PERMIT QUANTITIES:

STRIP EXISTING LOAMY SAND AND GRAVEL – 1,450 CY

IMPORT GRAVEL FOR SUBBASE UNDER
NEW DRIVEWAY AND PARKING AREA – 990 CY

ABBREVIATIONS

BIT CONC	BITUMINOUS CONCRETE
CONC	CONCRETE
HDPE	HIGH-DENSITY POLYETHYLENE
EOP	EDGE OF PAVEMENT
PVC	POLYVINYL CHLORIDE
RCP	REINFORCED CONCRETE PIPE
RD	ROOF DRAIN
FND	FOUND
N/F	NOW OR FORMERLY
TYP	TYPICAL
CO=	CLEAN OUT
RIM=	RIM ELEVATION
INV=	INVERT ELEVATION
R&D	REMOVE AND DEMOLISH
FE	FLARED END
AD	AREA DRAIN
WQS	WATER QUALITY STRUCTURE
OCS	OUTLET CONTROL STRUCTURE
TW	TOP OF WALL
BW	GRADE AT BOTTOM OF WALL
EOC	EDGE OF CONCRETE
PCC	PRECAST CONCRETE CURB
CCB	CAPE COD BERM

LEGEND

EXISTING		PROPOSED
100	CONTOUR	100
D	STORM DRAIN PIPE	D
W	WATER LINE	W
E	ELECTRIC MANHOLE	E
UGE	UNDERGROUND ELECTRICAL	UGE
OE	OVERHEAD ELECTRICAL WIRE	OE
G	GAS LINE	G
GG	GAS GATE	GG
S	SANITARY SEWER	S
	HYDRANT	
S	SEWER MANHOLE	S
D	DRAIN MANHOLE	D
	VALVE	
	CATCH BASIN	
	DOUBLE CATCH BASIN	
CCB	CAPE COD BERM	CCB
SGC	SLOPED GRANITE CURB	SGC
VGC	VERTICAL GRANITE CURB	VGC
EOP	EDGE OF PAVEMENT	EOP
429x5	SPOT GRADE	429x5
	LIGHT POLE	
	TREES	
	HANDICAP SPACE	
CLF	CHAIN LINK FENCE	CLF
FF	FINISH FLOOR ELEVATION	FF
LA	LANDSCAPED AREA	LA
	UTILITY POLE	

GRAPHIC SCALE

20 0 10 20 40 80

(IN FEET)
1 INCH = 20 FT.

NORFOLK PLANNING BOARD

WALTER BYRON, CHAIRMAN

JOHN WEDDLETON, VICE CHAIRMAN

ERIN HUNT, CLERK

GREGG DAMIANO, MEMBER

KEVIN KALKUT, MEMBER

DATE APPROVED

DATE ENDORSED

NO	DATE	REVISIONS

SEAL

COMMONWEALTH OF MASSACHUSETTS
ERIC S. WILHELMSEN
CIVIL
No. 41596
REGISTERED PROFESSIONAL ENGINEER
2/19/19

DATE :	FEB. 15, 2019
DRAWN :	CJS
SCALE :	1"=20'

LOT 21 SHIRE DRIVE

7 SHIRE DRIVE
NORFOLK, MASSACHUSETTS

CDW CONSULTANTS, INC.
CIVIL & ENVIRONMENTAL ENGINEERS
6 HURON DRIVE
NATICK, MA 01760
TEL. (508) 875-2657 FAX. (508) 875-6617
www.cdwconsultants.com

GRADING & DRAINAGE

C-3.0

SHEET X OF X

0' 20' 40' 80'

1819.00

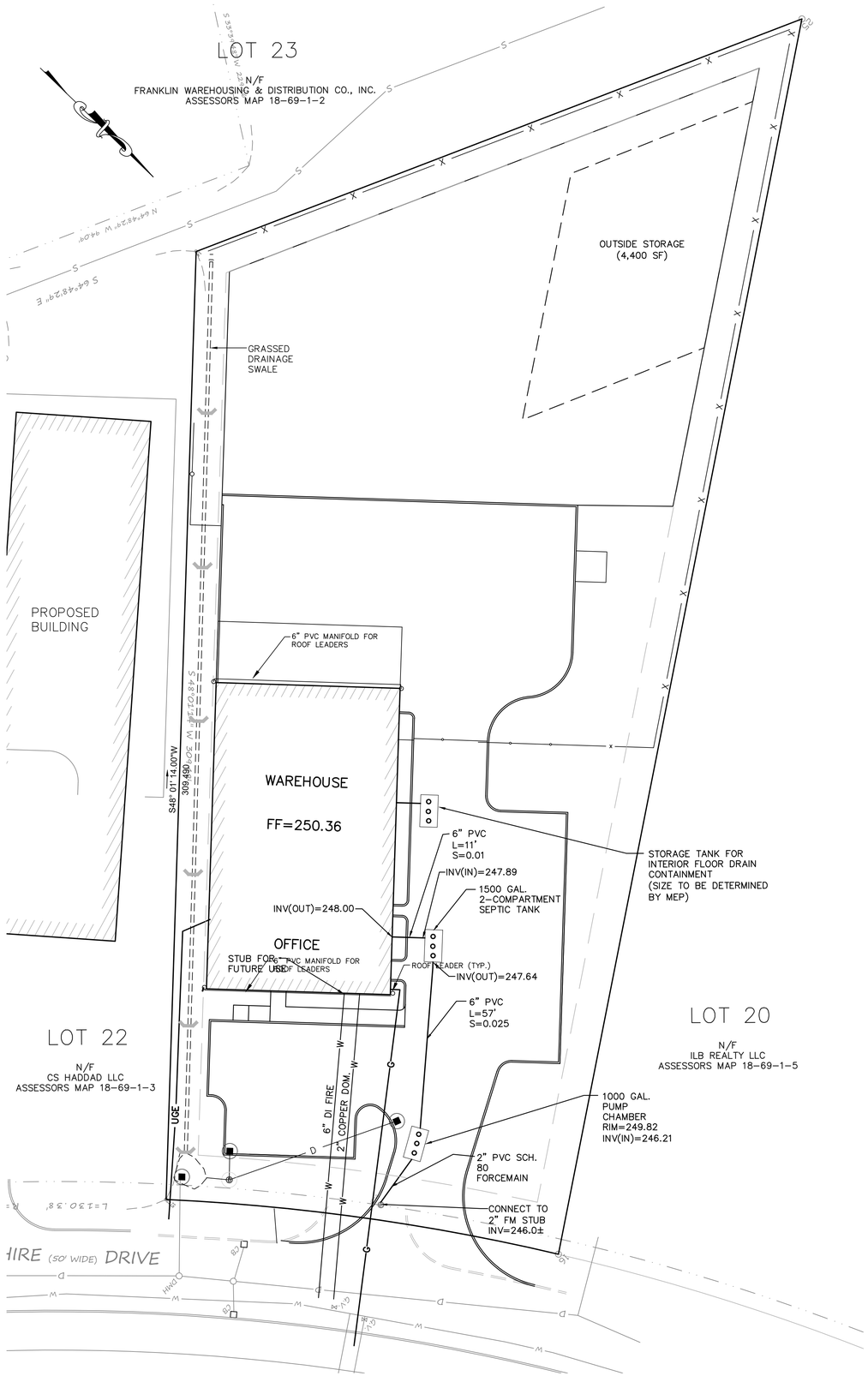

SOURCE:

1. EXISTING TOPOGRAPHY INFORMATION, PROPERTY LINES, LEASE LINES, UTILITY INFORMATION, EDGE OF PAVEMENT AND LOCATIONS OF STRUCTURES WERE TAKEN FROM A PLOT PROVIDED BY COLONIAL SURVEY, OF MEDWAY, MA FOR AN ON THE GROUND TOPOGRAPHICAL SURVEY PERFORMED ON JANUARY 14, 2019.
2. LOCATIONS OF EXISTING PIPES, CONDUITS, UTILITIES, FOUNDATIONS AND OTHER UNDERGROUND OBJECTS ARE NOT WARRANTED TO BE CORRECT AND THE CONTRACTOR SHALL HAVE NO CLAIM ON THAT ACCOUNT SHOULD THEY BE OTHER THAN SHOWN. THE EXACT LOCATION OF EXISTING PIPES, FOUNDATIONS, SITE FEATURES/ANCILLARY ITEMS, SERVICES, ETC..., ARE TO BE FIELD VERIFIED. CONTRACTOR SHALL CONTACT DIGSAFE AND APPROPRIATE AGENCIES/UTILTIES COMPANIES AS NECESSARY.
3. THE CONTRACTOR SHALL CALL DIGSAFE AT 1-888-344-7233 AT LEAST 72 HOURS, SATURDAYS, SUNDAYS, AND HOLIDAYS EXCLUDED, PRIOR TO EXCAVATING AT ANY LOCATION. A COPY OF THE DIG SAFE PROJECT REFERENCE NUMBER(S) SHALL BE GIVEN TO THE OWNER PRIOR TO EXCAVATION.
4. CONTRACTOR SHALL VISIT AND EXAMINE THE SITE TO FULLY UNDERSTAND ALL THE CONDITIONS PERTAINING TO THE WORK, UNDERSTAND DIFFICULTIES TO BE ENCOUNTERED, UNDERSTAND THE SCOPE OF THE DEMOLITION WORK FOR ALL SYSTEMS WHETHER SHOWN OR DESCRIBED AT NO ADDITIONAL COST TO THE OWNER.

UTILITY NOTES

1. ALL SITE WORK SHALL MEET OR EXCEED THE SITE WORK SPECIFICATIONS PREPARED FOR THIS PROJECT. THE CONTRACTOR SHALL BE RESPONSIBLE FOR VERIFYING THAT THE PROPOSED IMPROVEMENTS SHOWN ON THE PLANS DO NOT CONFLICT WITH ANY KNOWN EXISTING OR OTHER PROPOSED IMPROVEMENTS. IF ANY CONFLICTS ARE DISCOVERED, THE CONTRACTOR SHALL NOTIFY THE DESIGNER PRIOR TO ANY SITE WORK WHICH WOULD BE AFFECTED.
2. ALL SITE CONSTRUCTION SHALL BE IN CONFORMANCE WITH THE MASSACHUSETTS DEPARTMENT OF PUBLIC WORKS (DPW) STANDARD SPECIFICATIONS FOR HIGHWAYS AND BRIDGES, AND THE TOWN OF NORFOLK PUBLIC WORKS.
3. AN EROSION CONTROL BARRIER SHALL BE INSTALLED ALONG THE EDGE OF PROPOSED DEVELOPMENT AS SHOWN ON THE PLAN PRIOR TO THE COMMENCEMENT OF CONSTRUCTION OPERATIONS.
4. CONTRACTOR SHALL INSTALL SILT SACKS ON DOWN STREAM CATCH BASINS AS INDICATED ON THE PLANS. PRIOR TO INSTALLING A SILT SACK THE CONTRACTOR SHALL CLEAN OUT THE SUMP OF THE CATCH BASIN.
5. CONTRACTOR SHALL PROTECT ALL UNDERGROUND DRAINAGE, SEWER AND UTILITY FACILITIES FROM EXCESSIVE VEHICULAR LOADS DURING CONSTRUCTION. ANY DAMAGE TO THESE FACILITIES RESULTING FROM CONSTRUCTION LOADS WILL BE RESTORED TO ORIGINAL CONDITION.
6. EXCAVATION REQUIRED WITHIN THE PROXIMITY OF EXISTING UTILITY LINES SHALL BE DONE BY HAND. CONTRACTOR SHALL REPAIR ANY DAMAGE TO EXISTING UTILITY LINES OR STRUCTURES INCURRED DURING CONSTRUCTION OPERATIONS AT NO COST TO THE OWNER.
7. ALL UTILITY COVERS, GRATES, ETC. TO REMAIN SHALL BE ADJUSTED TO BE FLUSH WITH THE FINISH GRADE UNLESS OTHERWISE NOTED. RIM ELEVATIONS STRUCTURES AND MANHOLES ARE APPROXIMATE.
8. THE CONTRACTOR SHALL MAKE ALL ARRANGEMENTS FOR THE ALTERATION AND ADJUSTMENT OF GAS, ELECTRIC, TELEPHONE AND ANY OTHER PRIVATE UTILITIES BY THE UTILITY COMPANIES, AS REQUIRED. WHERE AN EXISTING UTILITY IS FOUND TO CONFLICT WITH THE PROPOSED WORK, THE LOCATION, ELEVATION AND SIZE OF THE UTILITY SHALL BE ACCURATELY DETERMINED WITHOUT DELAY BY THE CONTRACTOR, AND THE INFORMATION FURNISHED TO THE OWNER AND ENGINEER FOR RESOLUTION.
9. UNLESS OTHERWISE INDICATED, ABANDONED EXISTING UTILITY LINES SHALL BE CAPPED AND ABANDONED IN PLACE UNLESS THEY CONFLICT WITH PROPOSED IMPROVEMENTS. CAP REMAINING PORTIONS WHERE PARTIALLY REMOVED.
10. REFER TO ELECTRICAL DRAWINGS FOR ALL SITE ELECTRICAL WORK, AND TO PLUMBING AND MECHANICAL DRAWINGS FOR ALL PLUMBING AND MECHANICAL WORK.
11. INSTALL ALL UTILITIES (INCLUDING CONCRETE PADS) PER UTILITY COMPANY AND DPW STANDARDS.
12. ALL WATER UTILITY IMPROVEMENTS SHALL COMPLY WITH THE AMERICAN WATERWORKS ASSOCIATION STANDARDS AND THE TOWN OF NORFOLK DPW.
13. WATER LINE SIZES SHOWN ON PLAN TO BE VERIFIED BY MEP.
14. WATER PIPES WITH JOINTS OR FITTINGS AS REQUIRED TO PROVIDE A MINIMUM OF 6" CLEARANCE FOR UTILITY CROSSINGS OR AS NOTED IN THE SPECIFICATIONS.
15. ALL VALVES SHALL CONFORM TO THE TOWN STANDARDS AND SHALL OPEN TO THE RIGHT.
16. WATER LINES AND SEWER LINES SHALL BE SEPARATED BY 10' HORIZONTALLY. WHERE THIS IS NOT POSSIBLE, AN 18" SEPARATION BETWEEN THE BOTTOM OF THE WATER LINE AND THE TOP OF THE SEWER LINE IS ALSO ACCEPTABLE BUT ONLY WHERE THE WATER LINE IS ABOVE THE SEWER LINE. BOTH PIPES SHALL BE ENCASED IN CONCRETE IN ANY AREA WHERE NEITHER OF THE TWO SEPARATIONS NOTED ABOVE CAN BE MAINTAINED. IN SUCH AN INSTANCE, BOTH THE WATER LINE AND SEWER LINE (IN THE AREA OF ENCASEMENT) MUST BE PRESSURE TESTED TO 150 PSI TO ENSURE BOTH ARE WATERTIGHT.
17. ALL SANITARY PIPE SHALL BE SDR-35 PVC UNLESS OTHERWISE NOTED.
18. INSULATE SANITARY PIPES WHERE INVERT DEPTH IS LESS THAN FOUR (4) FEET BELOW FINISHED GRADE.
19. WATERLINE SIZE AND MATERIAL TO BE VERIFIED BY MEP.

ABBREVIATIONS

BIT CONC	BITUMINOUS CONCRETE
CONC	CONCRETE
HDPE	HIGH-DENSITY POLYETHYLENE
EOP	EDGE OF PAVEMENT
PVC	POLYVINYL CHLORIDE
RCP	REINFORCED CONCRETE PIPE
RD	ROOF DRAIN
FND	FOUND
N/F	NOW OR FORMERLY
TYP	TYPICAL
CO=	CLEAN OUT
RIM=	RIM ELEVATION
INV=	INVERT ELEVATION
R&D	REMOVE AND DEMOLISH
FE	FLARED END
AD	AREA DRAIN
WQS	WATER QUALITY STRUCTURE
OCS	OUTLET CONTROL STRUCTURE
TW	TOP OF WALL
BW	GRADE AT BOTTOM OF WALL
EOC	EDGE OF CONCRETE
PCC	PRECAST CONCRETE CURB
CCB	CAPE COD BERM

LEGEND

EXISTING		PROPOSED
100	CONTOUR	100
D	STORM DRAIN PIPE	D
W	WATER LINE	W
E	ELECTRIC MANHOLE	E
UGE	UNDERGROUND ELECTRICAL	UGE
OE	OVERHEAD ELECTRICAL WIRE	OE
G	GAS LINE	G
GG	GAS GATE	GG
S	SANITARY SEWER	S
	HYDRANT	
S	SEWER MANHOLE	S
D	DRAIN MANHOLE	D
	VALVE	
	CATCH BASIN	
	DOUBLE CATCH BASIN	
CCB	CAPE COD BERM	CCB
SGC	SLOPED GRANITE CURB	SGC
VGC	VERTICAL GRANITE CURB	VGC
EOP	EDGE OF PAVEMENT	EOP
429x5	SPOT GRADE	429x5
	LIGHT POLE	
	TREES	
	HANDICAP SPACE	
CLF	CHAIN LINK FENCE	CLF
FF	FINISH FLOOR ELEVATION	FF
LA	LANDSCAPED AREA	LA
	UTILITY POLE	

GRAPHIC SCALE

20 0 10 20 40 80

(IN FEET)
1 INCH = 20 FT.

NORFOLK PLANNING BOARD

WALTER BYRON, CHAIRMAN

JOHN WEDDLETON, VICE CHAIRMAN

ERIN HUNT, CLERK

GREGG DAMIANO, MEMBER

KEVIN KALKUT, MEMBER

DATE APPROVED

DATE ENDORSED

NO	DATE	REVISIONS

SEAL

COMMONWEALTH OF MASSACHUSETTS
ERIC S. WILHELMSEN
CIVIL
No. 41596
REGISTERED PROFESSIONAL ENGINEER
2/14/19

DATE :	FEB. 15, 2019
DRAWN :	CJS
SCALE :	1"=20'

LOT 21 SHIRE DRIVE

7 SHIRE DRIVE
NORFOLK, MASSACHUSETTS

CDW CONSULTANTS, INC.
CIVIL & ENVIRONMENTAL ENGINEERS
6 HURON DRIVE
NATICK, MA 01760
TEL. (508) 875-2657 FAX. (508) 875-6617
www.cdwconsultants.com

UTILITY PLAN

C-4.0

SHEET X OF X

0' 20' 40' 80'

1819.00

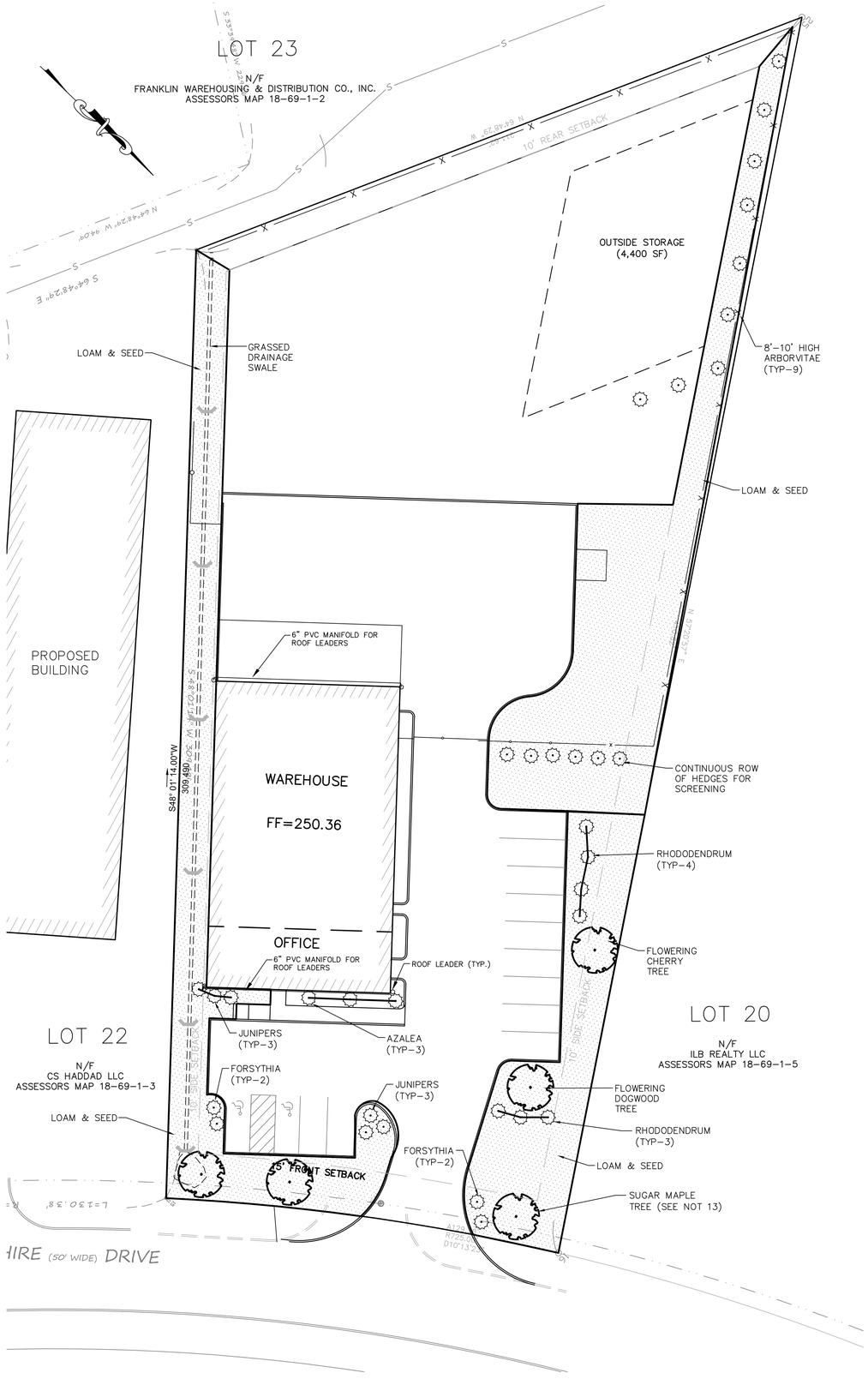

LANDSCAPE NOTES:

1. ALL PLANT MATERIAL SHALL CONFORM TO THE MINIMUM GUIDELINES ESTABLISHED BY THE AMERICAN STANDARD FOR NURSERY STOCK PUBLISHED BY THE AMERICAN ASSOCIATION OF NURSERYMEN, INC.
2. VERIFY ALL EXISTING UTILITY LINES PRIOR TO PLANTING AND REPORT ANY CONFLICTS TO THE OWNER OR HIS REPRESENTATIVE.
3. NO PLANT SHALL BE PLANTED BEFORE ACCEPTANCE OF ROUGH GRADING.
4. PLANT MATERIALS SHALL BEAR SAME RELATIONSHIP TO GRADE AS THEY BORE TO GRADE IN THE NURSERY.
5. ALL PLANT MATERIALS SHALL BE GUARANTEED FOR ONE YEAR FOLLOWING DATE OF FINAL ACCEPTANCE.
6. LOAM AND SEED ALL DISTURBED AREAS UNLESS OTHERWISE INDICATED.
7. TOPSOIL STRIPPED FROM THE SITE AND PROPERLY STOCKPILED PRIOR TO APPLICATION MAY, UPON APPROVAL OF THE ENGINEER, BE USED FOR PREPARATION OF LAWNS AND PLANTING BEDS. IT SHOULD BE FREE OF LARGE (ONE (1) INCH OR GREATER) COBBLES, ROOTS, OLD SOD, TRASH, WOOD OR OTHER CONTAMINANTS AND BE OF A FRIABLE CONSISTENCY AND SUITABLE FOR PLANT GROWTH.
8. PLANTING SEED SHALL BE SOWN IN SEASONAL CONDITIONS AS APPROPRIATE FOR GOOD SEED SURVIVAL, OR AT SUCH TIMES AS APPROVED BY THE OWNER. PROVIDE SUFFICIENT HOSE AND SPRINKLER HEADS FOR ADEQUATE WATERING TO MAINTAIN A MOIST SEED BED AT ALL TIMES.
9. WATER, MULCH AND SEED BED THOROUGHLY AND IMMEDIATELY AFTER COMPLETION OF MULCHING. SOIL SHALL BE MOISTENED TO A DEPTH OF FOUR (4) INCHES. CONTRACTOR SHALL INSTRUCT OWNERS REPRESENTATIVE ON APPROPRIATE WATERING PROCEDURES DURING INITIAL ESTABLISHMENT.
10. IF CERTAIN AREAS OF LAWN DO NOT PROMPTLY ESTABLISH VIGOROUS GROWTH, THESE AREAS SHALL BE RE-SEEDED AT THE SAME RATE AND IN THE SAME MANNER AS BEFORE IN INTERVALS OF TEN (10) DAYS, WHICH PROCESS SHALL CONTINUE UNTIL A GROWTH OF GRASS IS ESTABLISHED OVER THE ENTIRE AREA.
11. INSTALL JUTE MESH IN LANDSCAPED AREA ADJACENT TO FLUSH PRECAST CONCRETE CURB TO PREVENT EROSION UNTIL GRASS IS ESTABLISHED.
12. STREET TREES SHALL BE AT LEAST 12 FEET IN HEIGHT AND 3 INCHES IN CALIPER. INTERIOR TREES SHALL BE AT LEAST 7-8 FEET IN HEIGHT AND 2-1/2 INCHES IN CALIPER. SHRUBS SHALL BE NO SMALLER THAN 18 TO 24 INCHES IN HEIGHT.
13. STREET TREES (4) ARE SHOWN AS SYCAMORE MAPLE TREES. CONTRACTOR TO CONFIRM EXISTING STREET TREE SPECIES PRIOR TO INSTALLATION AND MATCH ACCORDINGLY.

PLANTING REQUIREMENTS

1 TREE PER 8 PARKING SPACES
13 SPACES = 2 TREES

40 SF OF LANDSCAPING FOR EACH FT. OF FRONTAGE
129.36' X 40 SF = 5,174 SF

PLANTING PROVIDED = 14,030 SF

ABBREVIATIONS

BIT CONC	BITUMINOUS CONCRETE
CONC	CONCRETE
HDPE	HIGH-DENSITY POLYETHYLENE
EOP	EDGE OF PAVEMENT
PVC	POLYVINYL CHLORIDE
RCP	REINFORCED CONCRETE PIPE
RD	ROOF DRAIN
FND	FOUND
N/F	NOW OR FORMERLY
TYP	TYPICAL
CO=	CLEAN OUT
RIM=	RIM ELEVATION
INV=	INVERT ELEVATION
R&D	REMOVE AND DEMOLISH
FE	FLARED END
AD	AREA DRAIN
WQS	WATER QUALITY STRUCTURE
OCS	OUTLET CONTROL STRUCTURE
TW	TOP OF WALL
BW	GRADE AT BOTTOM OF WALL
EOC	EDGE OF CONCRETE
PCC	PRECAST CONCRETE CURB
CCB	CAPE COD BERM

LEGEND

EXISTING		PROPOSED
100	CONTOUR	100
D	STORM DRAIN PIPE	D
W	WATER LINE	W
E	ELECTRIC MANHOLE	E
UGE	UNDERGROUND ELECTRICAL	UGE
OE	OVERHEAD ELECTRICAL WIRE	OE
G	GAS LINE	G
GG	GAS GATE	GG
S	SANITARY SEWER	S
	HYDRANT	
S	SEWER MANHOLE	S
D	DRAIN MANHOLE	D
	VALVE	
	CATCH BASIN	
	DOUBLE CATCH BASIN	
CCB	CAPE COD BERM	CCB
SGC	SLOPED GRANITE CURB	SGC
VGC	VERTICAL GRANITE CURB	VGC
EOP	EDGE OF PAVEMENT	EOP
429x5	SPOT GRADE	429x5
	LIGHT POLE	
	TREES	
	HANDICAP SPACE	
CLF	CHAIN LINK FENCE	CLF
FF	FINISH FLOOR ELEVATION	FF
LA	LANDSCAPED AREA	LA
	UTILITY POLE	

GRAPHIC SCALE

20 0 10 20 40 80

(IN FEET)
1 INCH = 20 FT.

NORFOLK PLANNING BOARD

WALTER BYRON, CHAIRMAN

JOHN WEDDLETON, VICE CHAIRMAN

ERIN HUNT, CLERK

GREGG DAMIANO, MEMBER

KEVIN KALKUT, MEMBER

DATE APPROVED

DATE ENDORSED

NO	DATE	REVISIONS

SEAL

COMMONWEALTH OF MASSACHUSETTS
ERIC S. WILHELMSEN
CIVIL
No. 41596
REGISTERED PROFESSIONAL ENGINEER
2/19/19

DATE :	FEB. 15, 2019
DRAWN :	CJS
SCALE :	1"=20'

LOT 21 SHIRE DRIVE

7 SHIRE DRIVE
NORFOLK, MASSACHUSETTS

CDW CONSULTANTS, INC.
CIVIL & ENVIRONMENTAL ENGINEERS
6 HURON DRIVE
NATICK, MA 01760
TEL. (508) 875-2657 FAX. (508) 875-6617
www.cdwconsultants.com

PLANTING PLAN

C-5.0

SHEET X OF X

0' 20' 40' 80'

1819.00

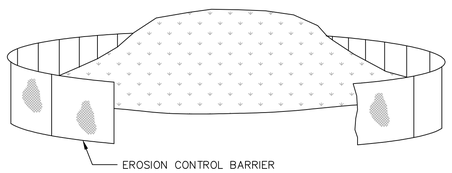

NOTE:

STABILIZE STOCKPILE WITH ANNUAL RYEGRASS, MULCH OR EROSION CONTROL BLANKETS.

TEMPORARY SOIL STOCKPILE - EROSION CONTROL
(NOT TO SCALE)

NOTES:
1. STRAW WATTLES MUST MEET THE CRITERIA OUTLINED IN THE SPECIFICATIONS BEFORE BEING UTILIZED AND BE FREE FROM DEFECTS OR TRANSPORTATION DAMAGE.

2. PROPER SITE PREPARATION IS ESSENTIAL TO ENSURE WATTLES ARE IN COMPLETE CONTACT WITH UNDERLYING SOIL. SEDIMENT TUBES ARE TO BE 18"–24" IN DIAMETER AND ARE TO BE TRENCHED 3 TO 5 INCHES.

3. WATTLES ARE TO BE INSTALLED PERPENDICULAR TO WATER FLOW.

5. THE WATTLES SHALL BE STAKED DOWN WITH 1 INCH BY 1 INCH WOOD STAKES OR 1.25 LBS/LINEAR FOOT STEEL POSTS EVERY 3 TO 4 FEET ALONG ITS LENGTH. THE STAKES SHALL BE A MINIMUM OF 2 FEET INTO THE GROUND LEAVING LESS THAN 6 INCHES OF THE STAKE ABOVE THE EXPOSED WATTLE. REFER TO THE MANUFACTURERS RECOMMENDATIONS FOR OTHER STAKING DETAILS.

6. SELECT PROPER LENGTH OF WATTLES TO MINIMIZE THE NUMBER NEEDED TO SPAN THE WIDTH OF AREA. IF NECESSARY, WATTLES CAN BE LAPPED A MINIMUM OF 6 INCHES TO PREVENT PASSAGE OF FLOW AND SEDIMENT THROUGH FIELD JOINT.

7. INSTALL WATTLES FOR DITCH CHECKS OVER BARE SOIL, MULCHED AREAS, OR EROSION CONTROL BLANKETS. KEEP WATTLES FOR DITCH CHECKS IN PLACE UNTIL FULLY ESTABLISHED VEGETATION AND ROOT SYSTEMS HAVE COMPLETELY DEVELOPED AND CAN SURVIVE ON THEIR OWN.

8. REMOVE AND/OR REPLACE INSTALLED WATTLES AS REQUIRED TO ADAPT TO CHANGING CONSTRUCTION SITE CONDITIONS. REMOVE WHEN THE FUNCTIONAL LONGEVITY IS EXCEEDED AS DETERMINED BY THE ENGINEER, INSPECTOR, OR MANUFACTURERS REPRESENTATIVE. GATHER WATTLES AND DISPOSE OF THEM IN REGULAR MEANS AS NON–HAZARDOUS INERT MATERIAL.

10. PRIOR TO FINAL STABILIZATION, BACKFILL ALL TRENCHES, DEPRESSIONS, AND OTHER GROUND DISTURBANCES CAUSED BY THE REMOVAL OF THE WATTLES.

SLOPE	ON SLOPE SPACING (FT)	MIN DIAMETER (INCH)
<6:1	50	12
6:1 – 4:1	25	20
4:1 – 2:1	20	20
2:1 – 1:1	10	20
>1:1	5	20

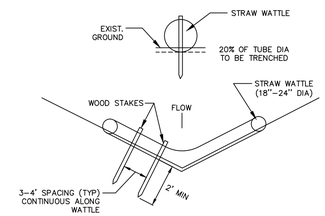

TEMPORARY EROSION CONTROL BARRIER, STRAW WATTLES (TYP)
(NOT TO SCALE)

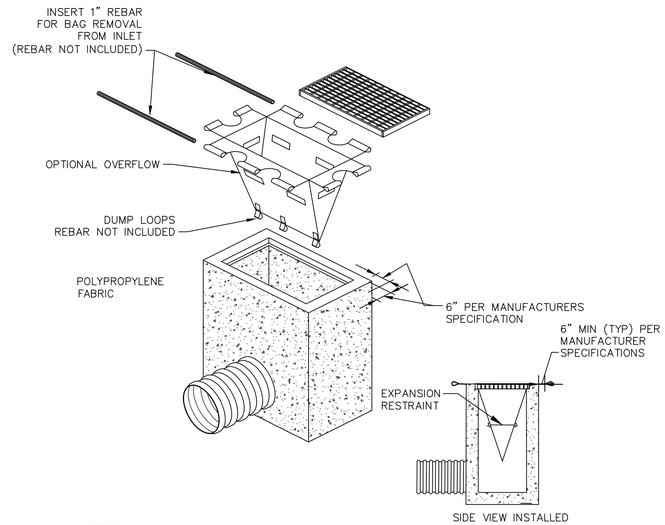

NOTES:

1. INSTALL CATCH BASIN INLET PROTECTION PER MANUFACTURER'S SPECIFICATIONS.

2. REMOVE CATCH BASIN GRATE AND INSTALL POLYPROPYLENE FABRIC OVER CATCH BASIN FRAME. REPLACE CATCH BASIN GRATE TO SECURE POLYPROPYLENE FABRIC IN PLACE.

3. LENGTH AND WIDTH WILL BE MANUFACTURED TO FIT THE OPENING OF THE CATCH BASIN OR DROP INLET.

4. MAINTENANCE: REMOVE ALL ACCUMULATED SEDIMENT AND DEBRIS FROM SURFACE AND VICINITY OF UNIT AFTER EACH STORM EVENT. REMOVE SEDIMENT THAT HAS ACCUMULATED WITHIN THE CONTAINMENT AREA OF THE CATCH BASIN INLET PROTECTION SACK AS NEEDED.

TEMPORARY CATCH BASIN INLET PROTECTION
(NOT TO SCALE)

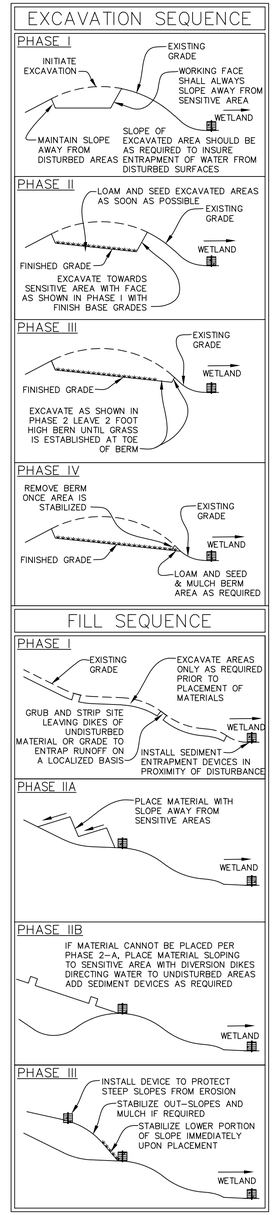

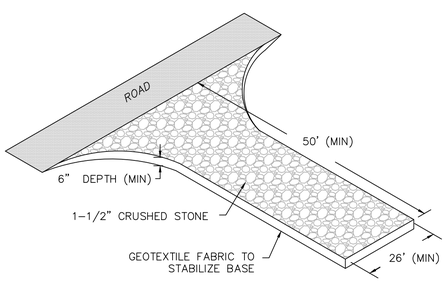

7 CONSTRUCTION ENTRANCE / EXIT PAD
(NOT TO SCALE)

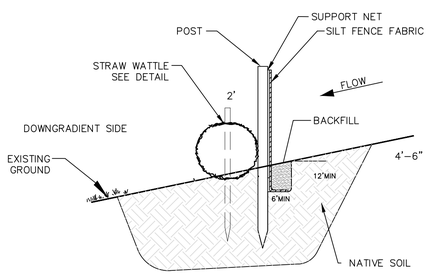

LAY THE TOE–IN FLAP OF FABRIC INTO THE UNDISTURBED BOTTOM OF TRENCH, BACKFILL THE TRENCH AND TAMP THE SOIL. PLACE HAYBALES NEXT TO THE FILTER FABRIC.

TOE-IN METHODS

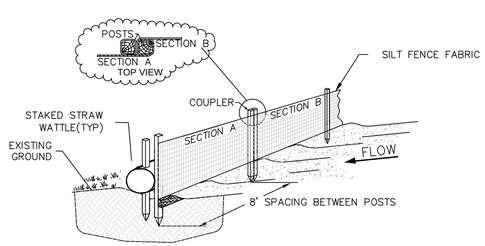

4 EROSION CONTROL BARRIER - STRAW WATTLE/SILTFENCE
(NOT TO SCALE)

NO	DATE	REVISIONS
1		

SEAL

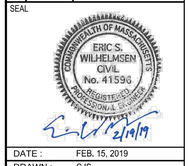

DATE :	FEB. 15, 2019
DRAWN :	CJS
SCALE :	NOT TO SCALE

LOT 21 SHIRE DRIVE

7 SHIRE DRIVE
NORFOLK, MASSACHUSETTS

CDW CONSULTANTS, INC.
CIVIL & ENVIRONMENTAL ENGINEERS
6 HURON DRIVE
NATICK, MA 01760
TEL. (508) 875-2657 FAX. (508) 875-6817
www.cdwconsultants.com

CONSTRUCTION DETAILS

C-6.0

1819.00

TABLE (MINIMUM)		
PIPE SIZE	MANHOLE DIAMETER	WALL THICKNESS
<= 21"	48"	5"
24"–27"	60"	6"
30"–36"	72"	7"
42"–48"	84"	8"

MANHOLE FRAME AND COVER NOTES:

1. MINIMUM FRAME WEIGHT – 265 LBS, MATERIAL – CAST IRON.
2. MINIMUM COVER WEIGHT – 200 LBS, MATERIAL – CAST IRON WITH THE WORD "SEWER" OR "DRAIN" CAST INTO IT FOR SMH OR DMH RESPECTIVELY.
3. ALL CAST IRON SHALL CONFORM TO ASTM A48, CLASS 30.
4. ALL BRICK SHALL BE HARD RED BRICK ASTM C32, GRADE SS, ADJUSTMENT – 12" MAX.

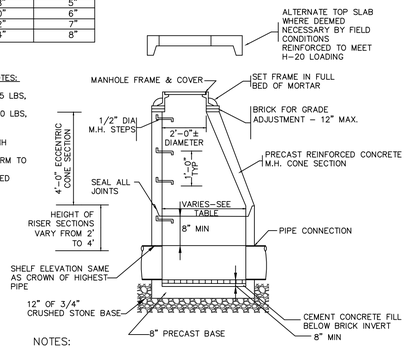

NOTES:

1. STRUCTURE DESIGN TO LATEST ASTM C478.
2. REINFORCING STEEL CONFORMS TO LATEST ASTM A 185.
3. CONCRETE COMPRESSIVE STRENGTH – 4,000 PSI @ 28 DAYS.
4. PRECAST SECTIONS TO BE H–20 LOADING.
5. ONE POUR MONOLITHIC BASE.
6. MANHOLES WITH MULTIPLE INCOMING PIPES MAY REQUIRE A LARGER DIAMETER STRUCTURE.

PRECAST CONCRETE DRAIN MANHOLE
(NOT TO SCALE)

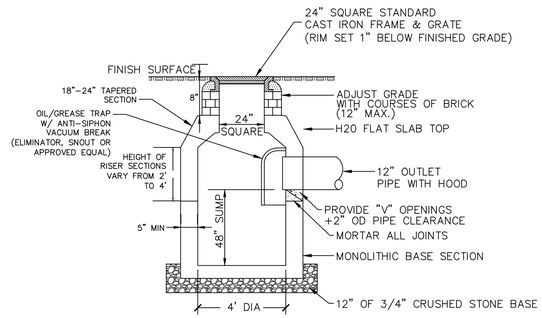

NOTES:

1. STRUCTURE DESIGN TO LATEST ASTM C478.
2. REINFORCING STEEL CONFORMS TO LATEST ASTM A 185.
3. CONCRETE COMPRESSIVE STRENGTH – 4,000 PSI @ 28 DAYS.
4. FLAT SLAB TOP AASHTO H–20
5. ONE POUR MONOLITHIC BASE.
6. MIN. FRAME WEIGHT 265 LBS, CAST IRON CONFORMING TO ASTM A48 – CLASS 30

PRECAST CONCRETE CATCH BASIN W/TRAP
(NOT TO SCALE)

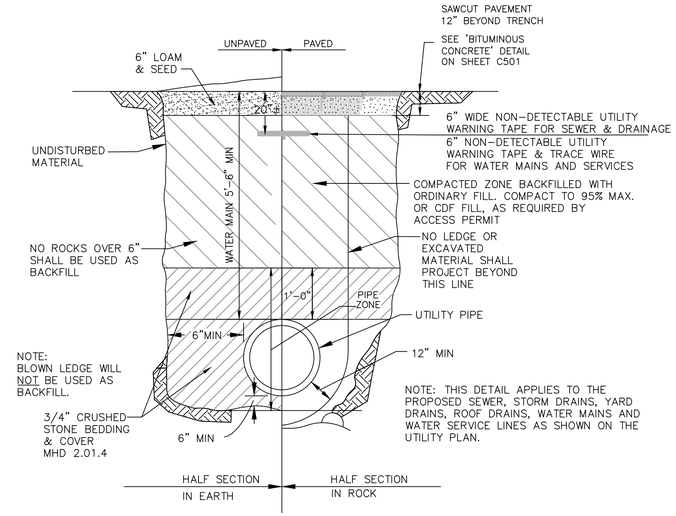

TYPICAL PIPE IN TRENCH
(NOT TO SCALE)

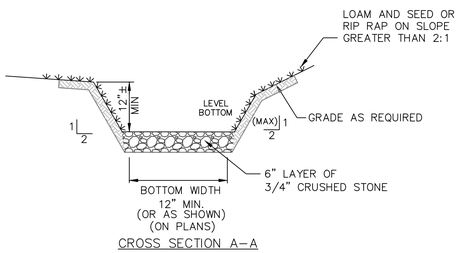

GRASSED SWALE WITH STONE BOTTOM
(NOT TO SCALE)

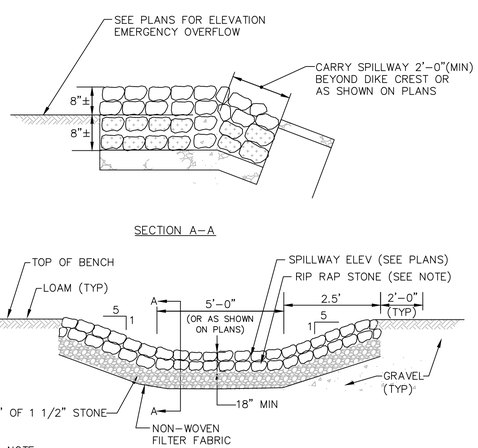

NOTE:
75% OF RIP RAP STONE SHALL BE 70 TO 100 LBS. AND SHALL BE HAND CHINKED TO LEAVE A SMOOTH SURFACE ALONG THE TOP OF THE DIKE AND A ROUGH SURFACE ALONG DOWNSTREAM SURFACE AND TOE OF THE DIKE.

TYPICAL RIP RAP SPILLWAY SILL
(NOT TO SCALE)

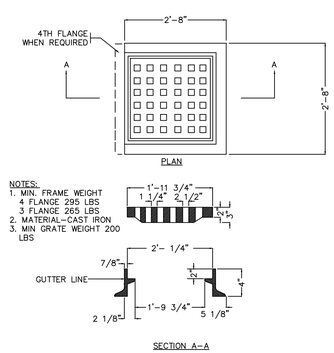

STANDARD CATCH BASIN FRAME AND GRATE
NOT TO SCALE

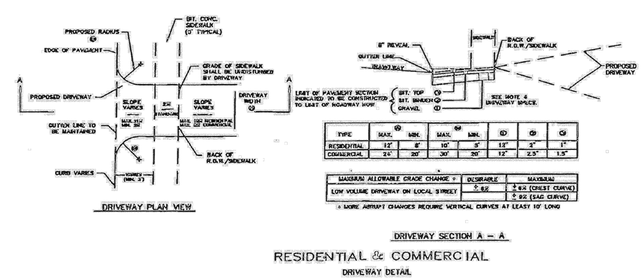

NO	DATE	REVISIONS
1		

SEAL

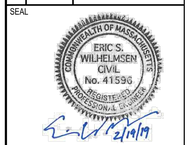

2/19/19

DATE :	FEB. 15, 2019
DRAWN :	CJS
SCALE :	1"=20'

LOT 21 SHIRE DRIVE

7 SHIRE DRIVE
NORFOLK, MASSACHUSETTS

CDW CONSULTANTS, INC.
CIVIL & ENVIRONMENTAL ENGINEERS
6 HURON DRIVE
NATICK, MA 01760
TEL. (508) 875-2657 FAX. (508) 875-6617
www.cdwconsultants.com

CONSTRUCTION DETAILS

C-7.0

1819.00

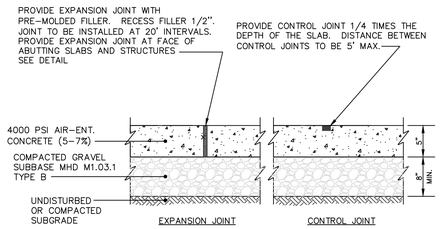

1. MAXIMUM CROSS SLOPE = 2%
2. MAXIMUM GRADIENT = 5%
3. PROVIDE EXPANSION JOINT AT FACE OF ABUTTING SLABS AND STRUCTURES.
4. 6" CURB W/ 1" CHAMFER TO BE INTEGRAL TO THE SIDEWALK.

CONCRETE SIDEWALK
(NOT TO SCALE)

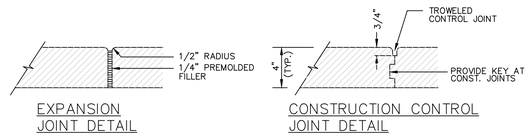

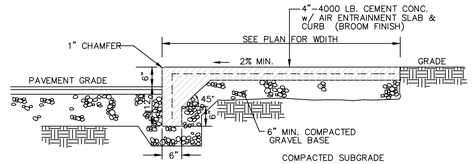

INTERGRAL CONCRETE CURB AT SIDEWALK
(NOT TO SCALE)

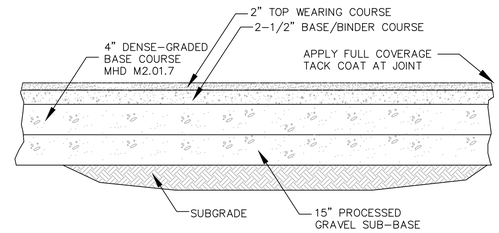

BITUMINOUS CONCRETE PAVEMENT
(NOT TO SCALE)

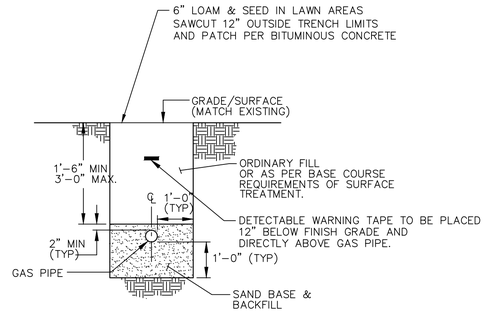

NOTE:
THE GENERAL CONTRACTOR SHALL BE RESPONSIBLE FOR ALL TRENCHING & ALL BACKFILL AS REQUIRED.

GAS TRENCH DETAIL
(NOT TO SCALE)

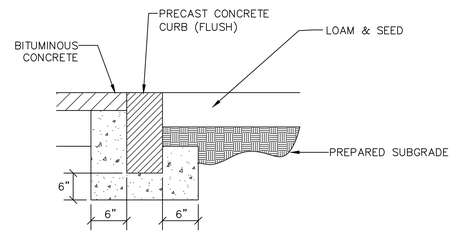

FLUSH CONCRETE CURB
(NOT TO SCALE)

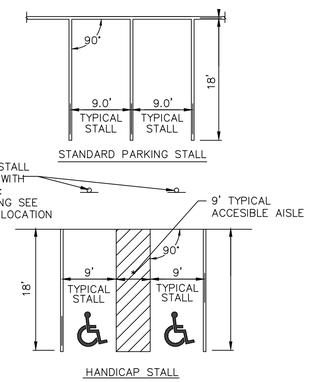

PARALLEL PARKING STALL LAYOUT
(NOT TO SCALE)

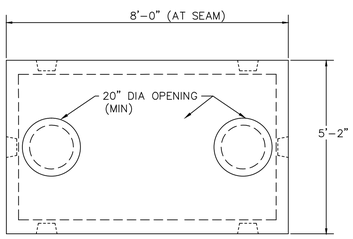

PLAN VIEW

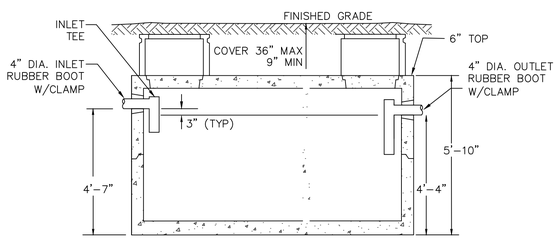

CROSS SECTIONAL VIEW

NOTES:
- CONCRETE: 4,000 PSI MINIMUM AFTER 28 DAYS
- TANK SHALL CONFORM TO TITLE 5 REQUIREMENTS
- ALL REINFORCEMENT PER ASTM C1227
- BAFFLE WALL OPTIONAL FOR TWO COMPARTMENT TANKS
- TONGUE AND GROOVE JOINT SEALED WITH BUTYL RESIN

PRECAST 1000 GALLON TANK PUMP CHAMBER
(NOT TO SCALE)

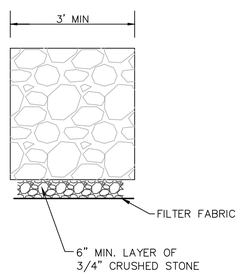

GABION CHECKDAM
1. ALL STONE TO CONFORM TO MHD M2.02.0.
2. GABIONS TO USE GEOMESH WIRE ROLLS OR APPROVED EQUAL.

CHECK DAM (GABION BASKET)
(NOT TO SCALE)

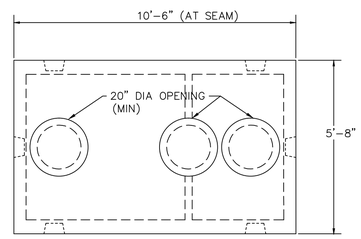

PLAN VIEW

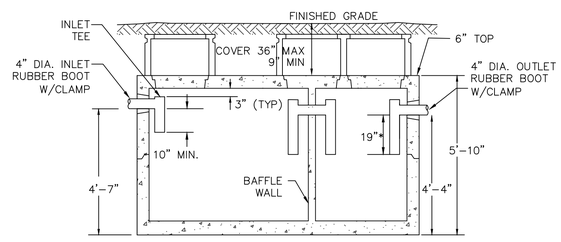

CROSS SECTIONAL VIEW

NOTES:
- CONCRETE: 4,000 PSI MINIMUM AFTER 28 DAYS
- TANK SHALL CONFORM TO TITLE 5 REQUIREMENTS
- ALL REINFORCEMENT PER ASTM C1227
- BAFFLE WALL OPTIONAL FOR TWO COMPARTMENT TANKS
- TONGUE AND GROOVE JOINT SEALED WITH BUTYL RESIN

PRECAST 1,500 GALLON TANK SEPTIC TANK
(NOT TO SCALE)

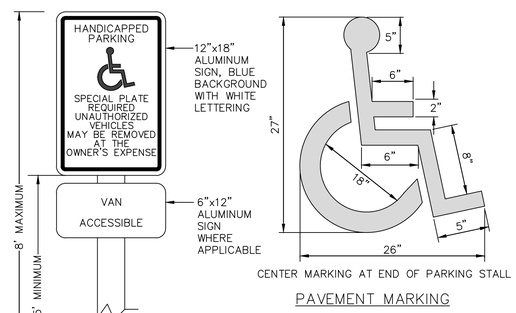

PAVEMENT MARKING

NOTE:
ALL HANDICAP PARKING AND SIGNAGE SHALL BE IN CONFORMANCE WITH THE RULES AND REGULATIONS OF THE ARCHITECTURAL ACCESS BOARD. SIGN(S) SHALL BE LOCATED SO THEY CANNOT BE OBSCURED BY A VEHICLE PARKED IN THE SPACE.

5 HANDICAP SIGNAGE
(NOT TO SCALE)

NO	DATE	REVISIONS
1		

SEAL

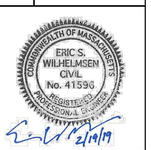

DATE :	FEB. 15, 2019
DRAWN :	CJS
SCALE :	1"=20'

LOT 21 SHIRE DRIVE

7 SHIRE DRIVE
NORFOLK, MASSACHUSETTS

CDW CONSULTANTS, INC.
CIVIL & ENVIRONMENTAL ENGINEERS
6 HURON DRIVE
NATICK, MA 01760
TEL. (508) 875-2657 FAX. (508) 875-6617
www.cdwconsultants.com

CONSTRUCTION DETAILS

C-8.0

1819.00

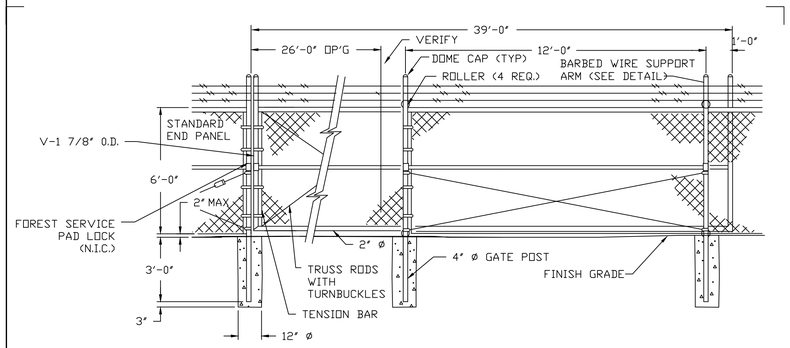

ROLLING CANTILEVER GATE
(NOT TO SCALE)

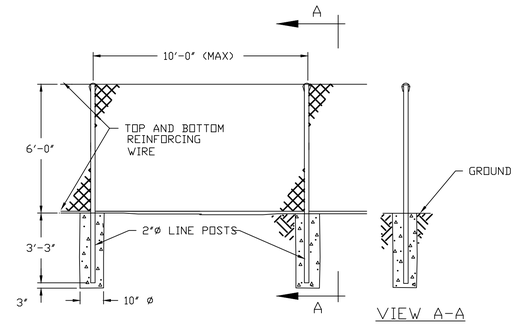

TYPICAL CHAINLINK FENCE
(NOT TO SCALE)

ILLUSIONS VINYL FENCE
MEDFORD, NY 11763
www.illusionsfence.com
TOLL FREE: 1-800-339-3362

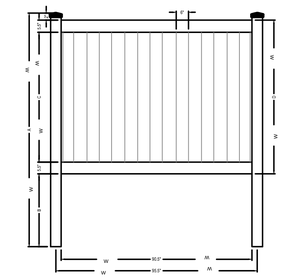

A		B		C		D	
HFT	INCHES	HFT	INCHES	HFT	INCHES	HFT	INCHES
3	60	3	22	3	25	3	36
4	84	4	34	4	37	4	48
5	96	5	34	5	49	5	60
6	108	6	34	6	61	6	72

NOTES:
1. ALL ILLUSIONS VINYL FENCES ARE ASTM F964-09 COMPLIANT.
2. AVAILABLE IN GRAND ILLUSIONS COLOR SPECTRUM (35 COLORS) AND GRAND ILLUSIONS VINYL WOODBOND (5 AUTHENTIC WOODGRAINS)
3. INCLUDES METAL REINFORCEMENT BOTTOM RAIL

ALL STYLES AVAILABLE IN GRAND ILLUSIONS 35 COLORS AND 5 AUTHENTIC WOODGRAINS

PROTECTED BY COPYRIGHT ©2012 CADdetails.com LTD.

www.CADdetails.com

FENCE SHALL BE THE "HOMESTEAD" AS MANUFACTURED BY WALPOLE WOODWORKERS OR EQUAL.

VINYL FENCE DETAIL
(NOT TO SCALE)

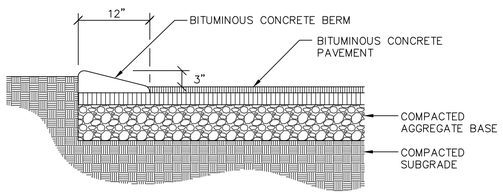

CAPE COD BERM
(NOT TO SCALE)

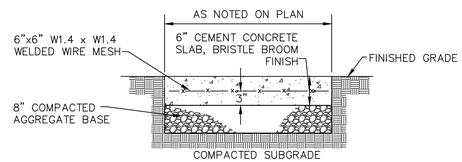

NOTE:
COORDINATE ALL PAD OPENINGS WITH EQUIPMENT MANUFACTURER
END MESH 3" FROM WALKWAY EDGE

TYPICAL DUMPSTER PAD
(NOT TO SCALE)

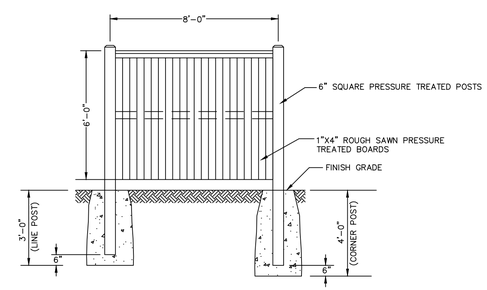

WOODEN FENCE - CORNER & LINE SECTION
NOT TO SCALE

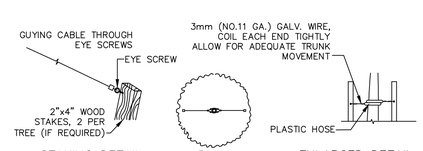

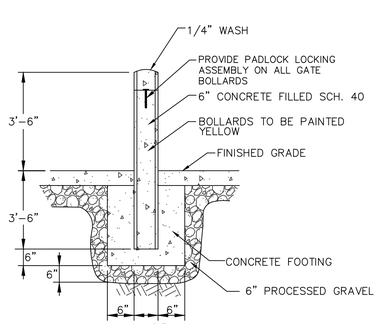

TYPICAL BOLLARD
(NOT TO SCALE)

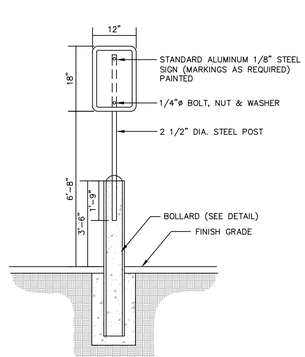

TYPICAL BOLLARD SIGN POST
(NOT TO SCALE)

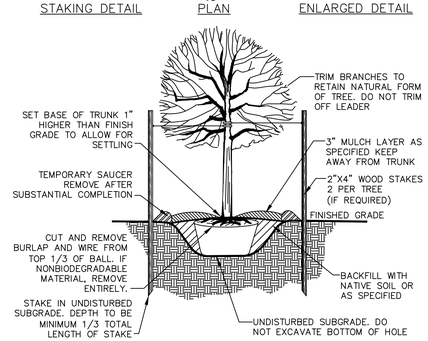

NOTES:
1. DO NOT DAMAGE MAIN ROOTS OR ROOT BALL WHEN INSTALLING TREE STAKE.
2. WATER THOROUGHLY AFTER INSTALLATION.
3. REMOVE SAUCER AND STAKES TWO YEARS OR LESS AFTER INSTALLATION.
4. PROVIDE DRAINAGE FOR PLANTING PIT IF IN IMPERMEABLE SOIL.

TREE PLANTING (3" CALIPER)
(NOT TO SCALE)

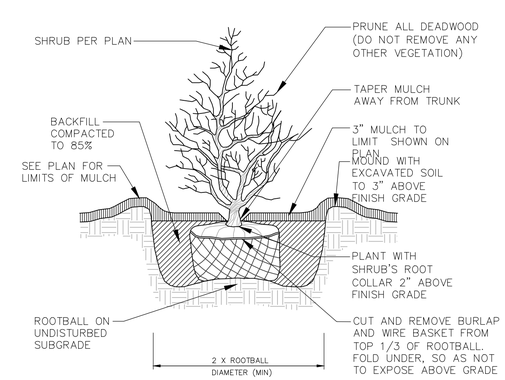

SHRUB PLANTING
(NOT TO SCALE)

NO	DATE	REVISIONS
1		

SEAL

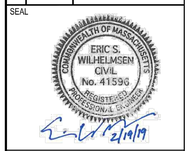

DATE :	FEB. 15, 2019
DRAWN :	CJS
SCALE :	1"=20'

LOT 21 SHIRE DRIVE

7 SHIRE DRIVE
NORFOLK, MASSACHUSETTS

CDW CONSULTANTS, INC.
CIVIL & ENVIRONMENTAL ENGINEERS
6 HURON DRIVE
NATICK, MA 01760
TEL. (508) 875-2657 FAX. (508) 875-6617
www.cdwconsultants.com

CONSTRUCTION DETAILS

C-9.0

1819.00