Telephone 215-855-8713 FAX 215-855-8714

GARY K. MUNKELT & ASSOCIATES

Consulting Engineers
Precast Concrete, Structural, Civil

1180 Welsh Rd. Suite 190 North Wales, PA 19454

PROJECT: DESIGN PRECAST CONCRETE RIGID FRAME
10'-0" SPAN x 5'-6" RISE

CLIENT: EF SHEA NEW ENGLAND CONCRETE PROD, INC
NORTH WILMINGTON, MA

JOB: BOYDE'S CROSSING
NORFOLK, MASSACHUSETTS

COMMONWEALTH OF MASSACHUSETTS
GARY K. MUNKELT
STRUCTURAL
No. 33084
REGISTERED PROFESSIONAL ENGINEER

8/23/16

TABLE OF CONTENTS

Title	Sheet
General Specification	2
Description of Product	3 - 4
Calculations – Box Culvert	5 – 44
Calculations – Footing	45
Reinforcing Drawings	46 - 47

GENERAL SPECIFICATIONS

1. Concrete for box culvert sections shall be designed to obtain a strength of 5,000 psi in 28 days. Material shall meet requirements of ACI 318.

2. Reinforcing steel for rebar shall be Grade 60 (obtain yield strength of 60,000 psi and meet requirements of ASTM A615.

3. Weight of Concrete – 150 lb/ft^3

4. Weight of Soil – 120 lb/ft^3

5. AASHTO HS-20 live load at surface.

6. Top of top slab is 2.00' minimum to 5.00' maximum below grade.

7. Soil is assumed to have properties such that equivalent soil pressure = 85 pcf.

REFERENCES

1. ASTM C 1504-04 titled "Standard Specification for Manufacture of Precast Reinforced Concrete Three-Sided Structures for Culverts and Storm Drains".

2. ACI 318-11 titled "Building Code Requirements for Reinforced Concrete".

3. AASHTO Standard Specifications for Highway Bridges, 17th Edition

4. ETCulvert Version 3.31 by Eriksson Software, Inc.

THIS SHEET
INTENTIONALLY
LEFT BLANK

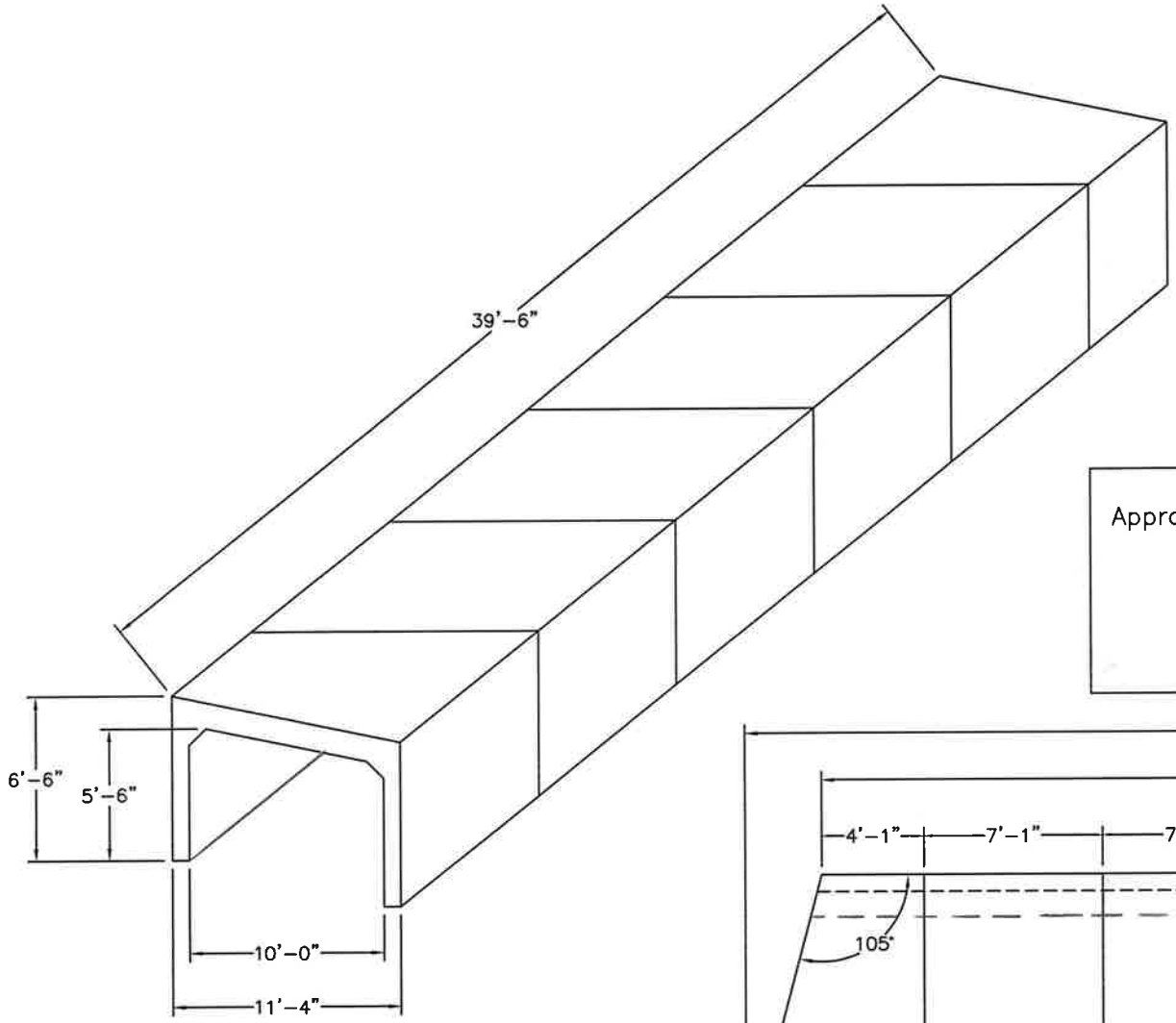

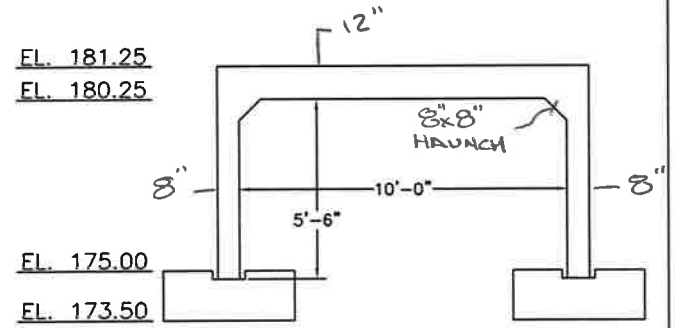

END VIEW

Approval: _____
Name of Company

_____
Authorized Agent

_____
Title Date

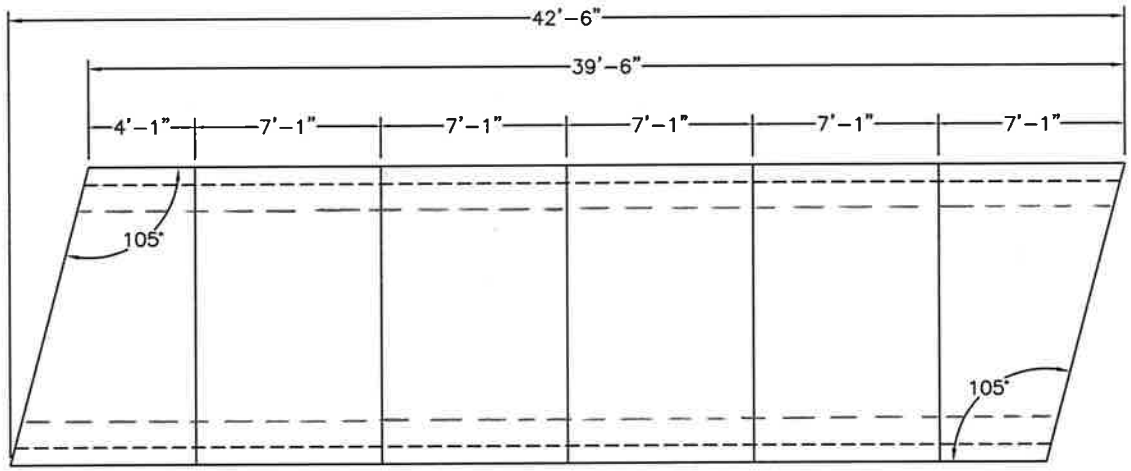

PLAN VIEW

CUSTOMER: DOWLING CORP.
JOB# 29204
BOYDE'S CROSSING – NORFOLK

SOIL COVER: 2' MIN. TO 5' MAX

SHEET 3 of 47

SHEA CONCRETE PRODUCTS
New England's Premier Precaster
800-696-7432 (SHEA)
www.sheaconcrete.com

773 Salem Street
P.O. Box 520
Wilmington, MA 01887

87 Haverhill Road
P.O. Box 807
Amesbury, MA 01913

160 Old Turnpike Road
Nottingham, NH 03290

BOX CULVERT (3-SIDED)
6'-6" x 10' x 39'-6"

NPCA

NOTES:

1. CONCRETE: 5,000 PSI MINIMUM AFTER 28 DAYS.
2. ALL REINFORCEMENT PER ASTM A615 GRADE 60.
3. DESIGNED H-20 LOADING

THIS SHEET
INTENTIONALLY
LEFT BLANK

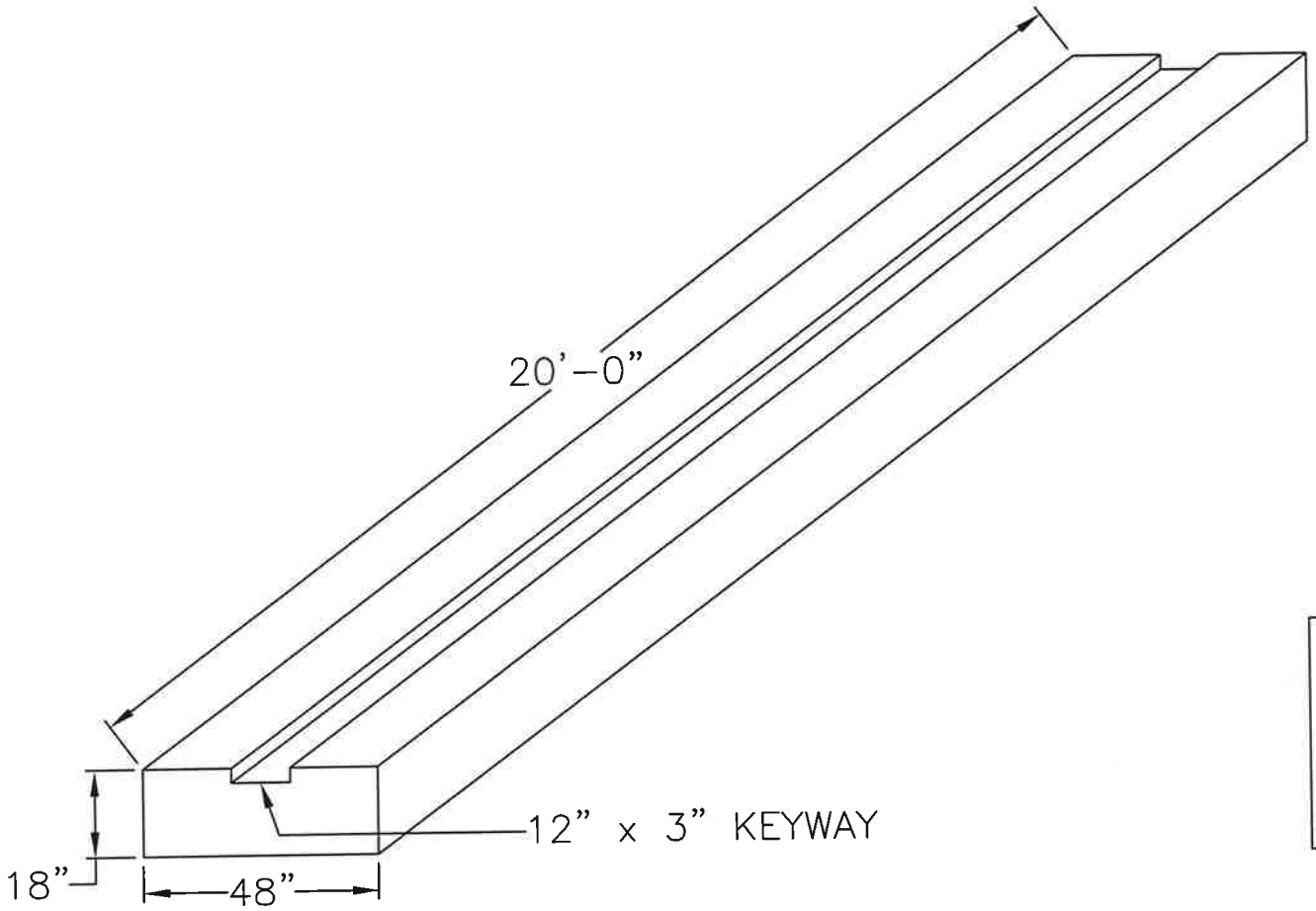

Approval: _____
Name of Company

_____
Authorized Agent

_____
Title Date

QUANTITY: (4)

NOTES:

1. CONCRETE: 5,000 PSI MINIMUM AFTER 28 DAYS.
2. ALL REINFORCEMENT PER ASTM A615 GRADE 60.
3. DESIGNED H-20 LOADING
4. CONTRACTOR MUST PROVIDE BEDDING MATERIAL AND DETAILS SUCH THAT THE SUBGRADE WILL PROVIDE AN ANGLE OF REPOSE OF 32° AND A FACTORED BEARING RESISTANCE > 2,000PSF.
5. STRUCTURAL BACKFILL SHALL BE FREE-DRAINING GRANULAR MATERIALS WITH LESS THAN 5% OF MATERIAL PASSING A NO. 200 SIEVE AND HAVE A MINIMUM ANGLE OF REPOSE OF 32°.

JOB: BOYDE'S CROSSING

SHEA CONCRETE PRODUCTS
New England's Premier Precaster
800-696-7432 (SHEA)
www.sheaconcrete.com

773 Salem Street
P.O. Box 520
Wilmington, MA 01887

87 Haverhill Road
P.O. Box 807
Amesbury, MA 01913

160 Old Turnpike Road
Nottingham, NH 03290

CULVERT CROSSING FOOTINGS
6'-6" x 10' x 39'-6"

Page:

NPCA

SHEET 4 of 4

THIS SHEET
INTENTIONALLY
LEFT BLANK

Spec.: Standard 17th ed. 2002
Design Method: Load Factor
Type of Culvert: Precast

Physical Dimensions

Clear Span:	10'-4 1/8" along skew
Clear Height:	5'-6"
Top Slab:	1'-0"
Ext. Wall:	8"
Fill Depth Range	
Maximum:	5.00 ft
Minimum:	2.00 ft
Increment:	0.50 ft
Length:	5'-7" minimum
Skew Angle:	0.00 deg
Bottom Slab Support:	Pinned
Top Haunch, Width:	8"
Top Haunch, Height:	8"

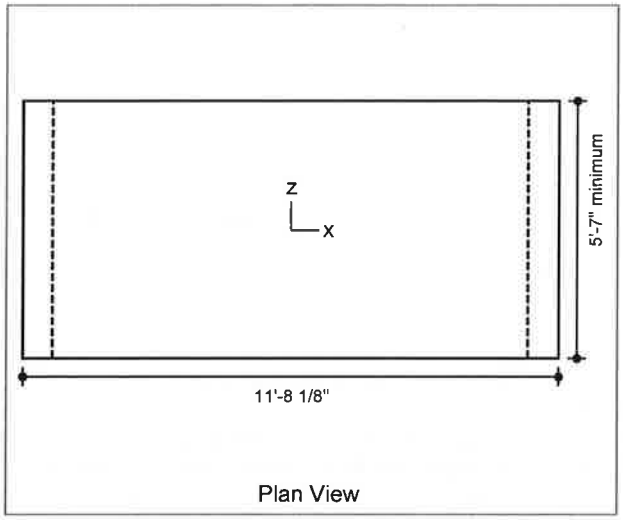

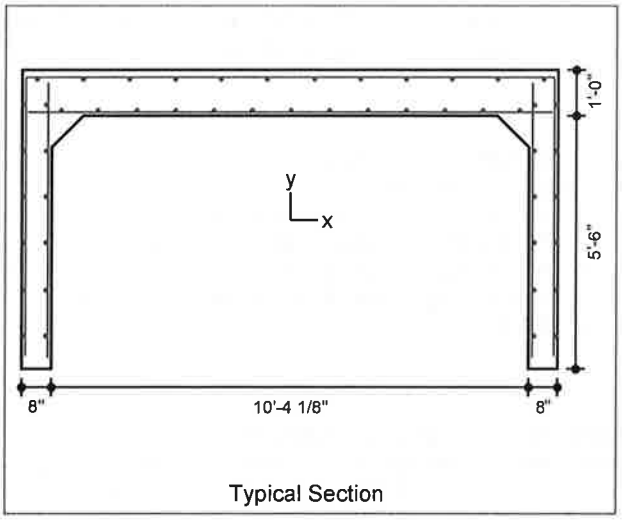

Material Properties

Concrete	
Strength, f'c:	5.000 ksi
Density:	0.150 kcf
Elasticity, Ec:	4287 ksi
Type:	Normal wt
Steel	
Yield, fy:	60 ksi
Allow Stress:	24 ksi
Elasticity, Es:	29000 ksi
Soil	
Density:	0.120 kcf
Reinforcement Covers	
Ext. Cover Top Slab:	2"
Ext. Cover Walls	1"
Int. Cover Walls	1"
Int. Top Slab	1"

Loads

Live Load	
Vehicle Names:	HS-20
Traffic Direction:	Parallel
Eq. Height of Soil:	2.00 ft (Entered)
Max No. of Lanes:	1
Dead Load	
Future Wearing Surface:	0.100 klf
Additional Dead Load:	0.000 klf
Concentrated Loads:	none
Lateral Soil Loads	
Eq. Fluid Press. Max:	60.00 pcf
Eq. Fluid Press. Min:	30.00 pcf
Consider Int. Water Press.:	yes

Copyright © 2010-2016 Eriksson Software, Inc.(eriktech.com)

Licensee: Gary K. Munkelt & Associates, LLC
ETCulvert v.3.31 Analysis and design of culverts
Copyright © 2010-2016 Eriksson Software, Inc.(www.LRFD.com)
Filename: Shea - Boydes Crossing.etc

Project: Boyde's Cossing
Task : Norfolk, MA
Client : Shea Concrete
Job No.: 160847
Agency :

CULVERT PROPERTIES

Type of Culvert: Precast Specification : STND 17th Edition 2002
Operating Mode : ANALYSIS
Design Method: Load Factor

Physical Dimensions

No. of Boxes: 1 Name: ThreeSidedCulvert
Clear Span : 10.3438 ft
Clear Height: 5.5000 ft Skew Angle : 0.00 deg
Length : 5.5833 ft Bottom Slab Support: No Bottom Slab, Pinned Supports
Fill Depth Range: Maximum : 5.00 ft Minimum : 2.00 ft Increment : 0.50 ft
Haunches: Top, Length: 8.0000 in Height: 8.0000 in
Member Thicknesses: Top Slab: 12.0000 in Bot Slab: 0.0000 in
Ext Wall: 8.0000 in

Material Properties

Concrete: Strength,f'c : 5.000 ksi Density : 0.150 kcf Elasticity,Ec: 4287 ksi
Type : Normal Weight
Steel: Yield,fy : 60.00 ksi Allow Stress: 24.00 ksi Elasticity,Es: 29000 ksi
Yield,fyv : 60.00 ksi Diameter : 1.125 in Type : Rebar
Soil: Density : 0.120 kcf Slope Factor: 1.750 (B1 Installation)
Fe Factor : 1.150 (Maximum for Compacted Fill)
Serviceability, Z : 98 k/in

Loads

Live Load: Vehicle: (AA) HS-20 - Design Vehicle

Axle No.	Weight(k)	Dist. From Previous(ft)
1	8.00	0.00
2	32.00	14.00
3	32.00	14.00

Gage Width: 6.00 ft, Tread Width: 0.00 in, Tread Length: 0.00 in
Include Tandem: yes
Tandem: Axle 1: 24.00 k, Axle 2: 24.00 k, Axle Spacing: 4.00 ft
Lane Load: 0.64 klf, P-Moment: 0.00 k, P-Shear: 0.00 k
Combine: Truck Or Tandem Or Lane
Inventory Rating Load Factor: 1.75 Operating Rating Load Factor: 1.35
Design Load Combinations: Group I
Override DLA: no
Include Lane Load : yes Max. No. of Lanes: Computed by Program
Traffic Direction : Lanes Parallel to Main Reinforcement
Neglect Live Load for Large Fill Depths: yes
Apply Surcharge at Fill Depths > 2 ft : yes
Compute Surcharge Depth: no Surcharge Depth : 2.00 ft
Dead Load: Future Wearing Surface : 0.10 klf Add. Dead Load : 0.00 klf
Concentrated Loads : none
Lateral Soil Loads: Max. Equiv. Fluid Press.: 60.00 pcf Min. Equiv. Fluid Press. : 30.00 pcf
Fluid Pressures : Use Int. Water Press. : yes

Load and Resistance Factors

Gamma : 1.300 Beta-d : 1.000
Beta-l I : 1.670 Beta-l Ib : 1.000
Phi Slab : 0.850 Phi Ext. : 0.800

Reinforcement

Reinforcement Covers	Exterior	Interior
Top Slab:	2.0000 in	1.0000 in
Walls :	1.0000 in	1.0000 in

Assigned reinforcement:

Location	Mark	Size	Spacing (in)
Top Slab Inside	A100 (AS2)	6	7.0000
Top Slab Outside	A300 (AS7)	5	7.0000
Top Corner	A1 (AS1)	6	7.0000
Ext. Wall Inside	B1 (AS4)	6	7.0000
Longitudinal	C1 (AS6)	4	12.0000
Top Distribution	C100 (AS5)	4	10.0000

Analysis Options

LL Analysis : Automatically Set Distribution Width to Account for Skew Effects: no
Limit Distribution Width to Culvert Length for Fills > 2 ft: no
Combine Axle Overlaps for Fills > 2 ft: yes
Axle Placement Increment for Moving Load Analysis: 20
Reinforcement: Always Include Distribution Steel: no
User Defined Longitudinal Steel: yes
Slenderness : Checked K Factor: 2.00
Analysis Modeling : Use Haunches in the Structural Analysis Model: yes
Left Node on Rollers for 3-Sided Frames: yes
Crit. Section: Consider Haunches when Selecting Critical Section Locations: yes
Extend Critical Section for Shear Beyond the End of the Haunch: no
Use Max. Moment with Max. Shear at the Critical Section for Shear: yes
Flexure : Ignore Axial Thrust: no
Live Load Deflection Criteria: 1/800

ANALYSIS RESULTS
==========

Top Slab Thickness = 12.00 in
Exterior Wall Thickness = 8.00 in

Modular Ratio (N) = 6.76 Max. Steel Ratio = 0.025
Design Span = 11.01 ft Design Height = 6.00 ft

Volume of Concrete: 0.721 cy/ft Weight of Steel: 162 lb/ft

Reinforcing Steel Schedule

Location	Bar Mark	Size	Type	Spacing (in)	As,prv (in2/ft)	H Leg (ft-in)
Top Slab (int)	A100 (AS2)	6	STR	7.00	0.754	
Top Slab (ext)	A300 (AS7)	5	STR	7.00	0.531	
Corner (Top)	A1 (AS1)	6	L-BAR	7.00	0.754	3- 5
Ext Wall (int)	B1 (AS4)	6	STR	7.00	0.754	
Top Slab (int- 1)	C100 (AS5)	4	STR	10.00	0.240	
Temperature (1)	C1 (AS6)	4	STR	12.00	0.200	
Temperature (1)	C1 (AS6)	4	STR	12.00	0.200	
Temperature (1)	C1 (AS6)	4	STR	12.00	0.200	

Note: A denotes flexural steel, B denotes vertical steel, C denotes longitudinal steel

AS Bar Marks

Location		Req Area in2/ft
Transverse Side Wall	- Outside Face (AS1)	0.754
Transverse Top Slab	- Inside Face (AS2)	0.754
Transverse Bottom Slab	- Inside Face (AS3)	0
Transverse Side Wall	- Inside Face (AS4)	0.754
Distribution Top Slab	- Inside Face (AS5)	0
Distribution Top Slab	- OutSide Face (AS6)	0
Transverse Top Slab	- Outside Face (AS7)	0.754
Transverse Bottom Slab	- Outside Face (AS8)	0

>>>Warning: This is a three sided culvert, therefore foundation has not been design by this program. Engineer should design the foundation. This program output reflects final service load conditions only. Handling, shipping and erection stresses are neither checked nor incorporated into program design and must be analyzed by the producer's engineer. External bracing is an acceptable method to mitigate overstress and possible product damage during the course of handling, shipping and erection.

Summary of Ratings Table:

	Flexure					Shear				
Truck	Fill	Member	Location	IR	OR	Fill	Member	Location	IR	OR
(AA) HS-20	2.00	2	MID	1.06	1.77	2.00	2	MID	6.42	10.72

Critical Sections Summary: Flexure

Member 1: (Exterior Wall), Thickness = 8.00 in

Loc	Dist. (in)	Design Moment (k-ft)	Corr. A. F. (k)	Mu (k-ft)	ds (in)	Ma (k-ft)	phi	As (in2)	1.2Mcr (k-ft)	Load Ratings IR	OR	Truck	Fill Depth (ft)
BOT	0.00	0.54	6.54	0.00	6.63	1.32	0.95	0.00	6.79	NC	NC	AA	5.00
MID	28.80	0.30	3.65	22.15	6.63	22.61	0.95	0.75	6.79	NC	NC	AA	2.00
MID-	36.00	-2.71	9.92	22.37	6.69	23.63	0.95	0.75	6.79	NC	NC	AA	5.00
TOP	10.00	-8.04	9.92	22.15	6.63	23.41	0.95	0.75	6.79	NC	NC	AA	5.00

Member 2: (Top Slab), Thickness = 12.00 in

Loc	Dist. (in)	Design Moment (k-ft)	Corr. A. F. (k)	Mu (k-ft)	ds (in)	Ma (k-ft)	phi	As (in2)	1.2Mcr (k-ft)	Load Ratings IR	OR	Truck	Fill Depth (ft)
LT	6.00	-7.87	3.58	32.90	9.63	33.79	0.95	0.75	15.27	NC	NC	AA	5.00
MID	66.06	34.97	0.42	36.48	10.63	36.57	0.95	0.75	15.27	1.06	1.77	AA	2.00
RT	6.00	-7.88	3.58	32.90	9.63	33.79	0.95	0.75	15.27	NC	NC	AA	5.00

Critical Sections Summary: Vertical Shear

Member 1: (Exterior Wall), Thickness = 8.00 in

Loc	Dist. (in)	Design Shear (k)	Corr. Moment (k-ft)	Corr. A. F. (k)	Dv (in)	phi*Vn	Beta	Vc (k)	Vs (k)	Av (in2)	Max. Spac (in)	Load Ratings IR	OR	Truck	Fill Depth (ft)
BOT	0.00	0.00	0.5	6.54	6.63	15.18	n/a	16.86d	0.00	0.00	0.00	NC	NC	AA	5.00
MID	36.00	0.05	0.3	3.65	6.63	15.18	n/a	16.86d	0.00	0.00	0.00	NC	NC	AA	2.00
MID-	36.00	0.40	-2.7	9.92	6.69	15.32	n/a	17.02d	0.00	0.00	0.00	NC	NC	AA	5.00
TOP	12.44	-4.26	-8.0	9.92	6.63	15.18	n/a	16.86d	0.00	0.00	0.00	NC	NC	AA	5.00

Member 2: (Top Slab), Thickness = 12.00 in

Loc	Dist. (in)	Design Shear (k)	Corr. Moment (k-ft)	Corr. A. F. (k)	Dv (in)	phi*Vn	Beta	Vc (k)	Vs (k)	Av (in2)	Max. Spac (in)	Load Ratings IR	OR	Truck	Fill Depth (ft)
LT	13.44	7.95	-7.9	3.58	9.63	22.05	n/a	24.50d	0.00	0.00	0.00	NC	NC	AA	5.00
MID	66.06	3.79	35.0	0.42	10.63	24.34	n/a	27.05d	0.00	0.00	0.00	6.42	10.72	AA	2.00
RT	13.44	7.95	-7.9	3.58	9.63	22.05	n/a	24.50d	0.00	0.00	0.00	NC	NC	AA	5.00

Vc Calculation By: a - Iterative Beta, b - Constant Beta, c - Box Culvert, d - Standard/Arema

Analysis Results: Fill Depth = 2.00 ft

Load Parameters:

Fe = 1.03

Applied Horizontal Loads: (k/ft)

Load Description	Bottom of Wall	Top of Wall
Horizontal Earth Load	0.510	0.150
Live Load Surcharge	0.120	0.120
Internal Water Pressure	0.343	0.000

Unfactored Moments and Shears due to All Loads: (k-ft, k) (Fill Depth = 2.00 ft)

M-PT	Mdl	Msp	Mwp	Vdl	Vsp	Vwp
Member 1: (Exterior Wall)						
Bottom						
1- 0	0.00	0.00	0.00	0.00	0.00	0.00
1- 1	0.00	-0.11	0.06	0.00	-0.37	0.20
1- 2	0.00	-0.43	0.23	0.00	-0.71	0.37
1- 3	0.00	-0.96	0.50	0.00	-1.04	0.53
1- 4	0.00	-1.67	0.85	0.00	-1.34	0.66
1- 5	0.00	-2.56	1.28	0.00	-1.62	0.77
1- 6	0.00	-3.61	1.77	0.00	-1.88	0.86
1- 7	0.00	-4.81	2.31	0.00	-2.12	0.94
1- 8	0.00	-6.14	2.89	0.00	-2.33	0.99
1- 9	0.00	-7.60	3.49	0.00	-2.53	1.02
1-10	0.00	-9.17	4.11	0.00	-2.70	1.03
Top						
Member 2: (Top Slab)						
Left						
2- 0	0.00	-9.18	4.12	2.81	0.00	0.00
2- 1	2.74	-9.18	4.12	2.19	0.00	0.00
2- 2	4.86	-9.18	4.12	1.65	0.00	0.00
2- 3	6.37	-9.18	4.12	1.10	0.00	0.00
2- 4	7.27	-9.18	4.12	0.55	0.00	0.00
2- 5	7.58	-9.18	4.12	0.00	0.00	0.00
2- 6	7.27	-9.18	4.12	-0.55	0.00	0.00
2- 7	6.37	-9.18	4.12	-1.10	0.00	0.00
2- 8	4.86	-9.18	4.12	-1.65	0.00	0.00
2- 9	2.74	-9.18	4.12	-2.19	0.00	0.00
2-10	0.00	-9.18	4.12	-2.81	0.00	0.00
Right						

Live Load Parameters:

Traffic Direction is Parallel to Main Reinforcement
Distribution Width : 7.50 ft
Impact Factor : 1.20
Lane Load : 0.054 k/ft Distribution Width : 23.50 ft

Analysis Truck, HS-20

Vehicle	Axle No.	Weight (k/ft)	Length (ft)	Dist. From Previous (ft)
Truck	1	0.366	3.50	
	2	1.463	3.50	14.00
	3	1.463	3.50	14.00

Tandem	1	0.754	8.33

Pinned/Roller Reactions Applied to Structure: (service load values, k/unit width) (Fill Depth = 2.00 ft)

```
                 ___________
                |           |
                |           |
                |           |
                |           |
           ---->|           |<----
                A           A
                |           |
                |           |
```

	Vertical	Horizontal	Horizonal Movement of Left Node (in)
Dead Load	3.41	0.00	-0.020
Soil Pressure	0.00	0.00	-0.032
Water Pressure	0.00	0.00	-0.121
Live Load	4.31	0.00	-0.047
Without LL	3.41	0.00	0.077
With LL	7.72	0.00	0.030

Note: Reactions as shown - positive, movement to right - positive

Truck Positions That Cause Maximum Results:

Maximum +Moment in Top Slab

Vehicle	Axle No.	Weight (k)	Length (ft)	Dist. From Left End (ft)
Truck	1	0.366	3.50	19.51
	2	1.463	3.50	5.51
	3	1.463	3.50	-8.49

Maximum +Moment : 11.85 k-ft
Corresponding Moment at End : 0.00 k-ft

Maximum -Moment in Top Slab

Vehicle	Axle No.	Weight (k)	Length (ft)	Dist. From Left End (ft)
Truck	1	0.366	3.50	15.75
	2	1.463	3.50	1.75
	3	1.463	3.50	-12.25

Maximum -Moment : 4.31 k-ft
Corresponding Moment at Mid : -0.81 k-ft

Maximum +Shear in Top Slab

Truck	1	0.366	3.50	23.26
	2	1.463	3.50	9.26
	3	1.463	3.50	-4.74

Maximum +Shear : -4.31 k
Corresponding Shear at Mid : 0.81 k

Maximum -Shear in Top Slab

Truck	1	0.366	3.50	19.51
	2	1.463	3.50	5.51
	3	1.463	3.50	-8.49

Maximum -Shear : 0.00 k
Corresponding Shear at Mid : 0.00 k

Maximum Deflection in Top Slab = 0.009 in
Truck 1 0.00 5.51

Maximum +Moment in Top Slab

Maximum +Moment : 83333.34 k-ft
Corresponding Moment at End : 0.00 k-ft

Maximum +Shear in Top Slab
Tandem 1 0.754 8.33 6.84
Maximum +Shear : -3.91 k
Corresponding Shear at Mid : 0.25 k

Maximum -Moment in Top Slab
Tandem 1 0.754 8.33 4.17
Maximum -Moment : 3.91 k-ft
Corresponding Moment at Mid : -0.25 k-ft

Maximum -Shear in Top Slab
Tandem 1 0.754 8.33 5.51
Maximum -Shear : 0.00 k
Corresponding Shear at Mid : 0.00 k

Unfactored Moments and Shears due to Truck Loads: (k-ft, k)

Truck Tandem Lane

M-PT	Mll+	Mll-	Vll+	Vll-	Mll+	Mll-	Vll+	Vll-	Mll+	Mll-	Vll+	Vll-
Member 1: (Exterior Wall)												
Bottom												
1- 0	0.00	0.00	0.00	0.00	0.00	0.00	0.00	0.00	0.00	0.00	0.00	0.00
1- 1	0.00	0.00	0.00	0.00	0.00	0.00	0.00	0.00	0.00	0.00	0.00	0.00
1- 2	0.00	0.00	0.00	0.00	0.00	0.00	0.00	0.00	0.00	0.00	0.00	0.00
1- 3	0.00	0.00	0.00	0.00	0.00	0.00	0.00	0.00	0.00	0.00	0.00	0.00
1- 4	0.00	0.00	0.00	0.00	0.00	0.00	0.00	0.00	0.00	0.00	0.00	0.00
1- 5	0.00	0.00	0.00	0.00	0.00	0.00	0.00	0.00	0.00	0.00	0.00	0.00
1- 6	0.00	0.00	0.00	0.00	0.00	0.00	0.00	0.00	0.00	0.00	0.00	0.00
1- 7	0.00	0.00	0.00	0.00	0.00	0.00	0.00	0.00	0.00	0.00	0.00	0.00
1- 8	0.00	0.00	0.00	0.00	0.00	0.00	0.00	0.00	0.00	0.00	0.00	0.00
1- 9	0.00	0.00	0.00	0.00	0.00	0.00	0.00	0.00	0.00	0.00	0.00	0.00
1-10	0.00	0.00	0.00	0.00	0.00	0.00	0.00	0.00	0.00	0.00	0.00	0.00
Top												
Member 2: (Top Slab)												
Left												
2- 0	0.00	0.00	4.31	0.00	0.00	0.00	3.91	0.00	0.00	0.00	0.30	0.00
2- 1	4.25	0.00	3.79	-0.08	3.87	0.00	3.28	-0.04	0.30	0.00	0.24	0.00
2- 2	7.58	0.00	3.28	-0.32	6.88	0.00	2.65	-0.17	0.53	0.00	0.19	-0.01
2- 3	9.95	0.00	2.77	-0.72	9.03	0.00	2.03	-0.37	0.69	0.00	0.15	-0.03
2- 4	11.37	0.00	2.26	-1.23	10.32	0.00	1.49	-0.66	0.79	0.00	0.11	-0.05
2- 5	11.85	0.00	1.75	-1.75	10.75	0.00	1.04	-1.04	0.83	0.00	0.07	-0.07
2- 6	11.37	0.00	1.23	-2.26	10.32	0.00	0.66	-1.49	0.79	0.00	0.05	-0.11
2- 7	9.95	0.00	0.72	-2.77	9.03	0.00	0.37	-2.03	0.69	0.00	0.03	-0.15
2- 8	7.58	0.00	0.32	-3.28	6.88	0.00	0.17	-2.65	0.53	0.00	0.01	-0.19
2- 9	4.25	0.00	0.08	-3.79	3.87	0.00	0.04	-3.28	0.30	0.00	0.00	-0.24
2-10	0.00	0.00	0.00	-4.31	0.00	0.00	0.00	-3.91	0.00	0.00	0.00	-0.30
Right												

Serviceability Check: Crack Control

Bar Mark	Location	Moment (k-ft)	Fss (ksi)	Allow (ksi)
A1	Top Corner Bar	-3.8	5.57	32.89
A100	Top Slab (int)	19.0	30.68	32.89
A300	Top Slab (ext)	0.0	0.00	99.99
B1	Ext Wall (int)	0.0	0.00	32.89
B2	Ext Wall (ext)	0.0	0.00	0.00

Serviceability Check: Live Load Deflection

Deflection Ratio of Top Slab = 1/12889 (Limit = 1/800)

Strength Limit State at Critical Sections: Flexure

Member 1: (Exterior Wall), Thickness = 8.00 in

Loc	Dist. (in)	Design Moment (k-ft)	Corr. A. F. (k)	Mu (k-ft)	ds (in)	Ma (k-ft)	phi	As (in2)	1.2Mcr (k-ft)	Load Ratings IR	Load Ratings OR
BOT	0.00	-0.30	3.65	0.00	6.63	0.74	0.95	0.00	6.79	NC	NC
MID	28.80	0.30	3.65	22.15	6.63	22.61	0.95	0.75	6.79	NC	NC
MID-	36.00	-1.66	13.00	22.37	6.69	24.01	0.95	0.75	6.79	NC	NC
TOP	10.00	-4.91	13.00	22.15	6.63	23.81	0.95	0.75	6.79	NC	NC

Member 2: (Top Slab), Thickness = 12.00 in

Loc	Dist. (in)	Design Moment (k-ft)	Corr. A. F. (k)	Mu (k-ft)	ds (in)	Ma (k-ft)	phi	As (in2)	1.2Mcr (k-ft)	Load Ratings IR	Load Ratings OR
LT	6.00	-4.96	2.17	32.90	9.63	33.44	0.95	0.75	15.27	NC	NC
MID	66.06	34.97	0.42	36.48	10.63	36.57	0.95	0.75	15.27	1.06	1.77
RT	6.00	-4.96	2.17	32.90	9.63	33.44	0.95	0.75	15.27	NC	NC

Note: Mu - Resisting moment under pure flexure, Ma - Allowable moment under applied axial load

Strength Limit State at Critical Sections: Vertical Shear

Member 1: (Exterior Wall), Thickness = 8.00 in

Loc	Dist. (in)	Design Shear (k)	Corr. Moment (k-ft)	Corr. A. F. (k)	Dv (in)	phi*Vn (k)	Beta	Theta	Vc (k)	Vs (k)	Av (in2)	Max. Spac (in)	Load Ratings IR	Load Ratings OR
BOT	0.00	0.00	-0.3	3.65	6.63	15.18	n/a	n/a	16.86d	0.00	0.00	0.00	NC	NC
MID	36.00	0.05	0.3	3.65	6.63	15.18	n/a	n/a	16.86d	0.00	0.00	0.00	NC	NC
MID-	36.00	0.05	-1.7	13.00	6.69	15.32	n/a	n/a	17.02d	0.00	0.00	0.00	NC	NC
TOP	12.44	-3.10	-4.9	13.00	6.63	15.18	n/a	n/a	16.86d	0.00	0.00	0.00	NC	NC

Member 2: (Top Slab), Thickness = 12.00 in

Loc	Dist. (in)	Design Shear (k)	Corr. Moment (k-ft)	Corr. A. F. (k)	Dv (in)	phi*Vn (k)	Beta	Theta	Vc (k)	Vs (k)	Av (in2)	Max. Spac (in)	Load Ratings IR	Load Ratings OR
LT	13.44	11.06	-5.0	2.17	9.63	22.05	n/a	n/a	24.50d	0.00	0.00	0.00	NC	NC
MID	66.06	3.79	35.0	0.42	10.63	24.34	n/a	n/a	27.05d	0.00	0.00	0.00	6.42	10.72
RT	13.44	11.06	-5.0	2.17	9.63	22.05	n/a	n/a	24.50d	0.00	0.00	0.00	NC	NC

Vc Calculation By: a - Iterative Beta, b - Constant Beta, c - Box Culvert, d - Standard/Arema

Load Combination Results at Tenth Points: (k-ft, k)(Fill Depth = 2.00 ft)

M-PT	+Moment	-Moment	+Axial	-Axial	+Shear	-Shear
Member 1: (Exterior Wall)						
Bottom						
1- 0	0.000	0.000	3.652	13.001	0.000	0.000
1- 1	0.005	-0.067	3.652	13.001	0.016	-0.477
1- 2	0.015	-0.267	3.652	13.001	0.019	-0.927
1- 3	0.023	-0.600	3.652	13.001	0.009	-1.348
1- 4	0.022	-1.065	3.652	13.001	-0.014	-1.741
1- 5	0.003	-1.661	3.652	13.001	-0.049	-2.106
1- 6	-0.041	-2.387	3.652	13.001	-0.097	-2.443
1- 7	-0.118	-3.243	3.652	13.001	-0.158	-2.752
1- 8	-0.235	-4.228	3.652	13.001	-0.231	-3.033
1- 9	-0.399	-5.340	3.652	13.001	-0.318	-3.285
1-10	-0.619	-6.579	3.652	13.001	-0.417	-3.510
Top						
Member 2: (Top Slab)						
Left						
2- 0	-0.613	-6.580	0.417	2.172	13.001	3.652
2- 1	12.180	-3.014	0.417	2.172	11.090	2.678
2- 2	22.167	-0.266	0.417	2.172	9.265	1.440
2- 3	29.277	1.697	0.417	2.172	7.440	-0.147
2- 4	33.530	2.875	0.417	2.172	5.616	-1.966
2- 5	34.969	3.268	0.417	2.172	3.791	-3.791
2- 6	33.528	2.874	0.417	2.172	1.966	-5.616
2- 7	29.275	1.696	0.417	2.172	0.147	-7.440
2- 8	22.166	-0.267	0.417	2.172	-1.440	-9.265
2- 9	12.178	-3.015	0.417	2.172	-2.678	-11.090
2-10	-0.615	-6.582	0.417	2.172	-3.652	-13.001
Right						

Analysis Results: Fill Depth = 2.50 ft

Load Parameters:

Fe = 1.04

Applied Horizontal Loads: (k/ft)

Load Description	Bottom of Wall	Top of Wall
Horizontal Earth Load	0.540	0.180
Live Load Surcharge	0.120	0.120
Internal Water Pressure	0.343	0.000

Unfactored Moments and Shears due to All Loads: (k-ft, k) (Fill Depth = 2.50 ft)

M-PT	Mdl	Msp	Mwp	Vdl	Vsp	Vwp
Member 1: (Exterior Wall)						
Bottom						
1- 0	0.00	0.00	0.00	0.00	0.00	0.00
1- 1	0.00	-0.12	0.06	0.00	-0.39	0.20
1- 2	0.00	-0.46	0.23	0.00	-0.75	0.37
1- 3	0.00	-1.01	0.50	0.00	-1.09	0.53
1- 4	0.00	-1.76	0.85	0.00	-1.41	0.66
1- 5	0.00	-2.69	1.28	0.00	-1.71	0.77
1- 6	0.00	-3.80	1.77	0.00	-1.99	0.86
1- 7	0.00	-5.07	2.31	0.00	-2.24	0.94
1- 8	0.00	-6.49	2.89	0.00	-2.48	0.99
1- 9	0.00	-8.04	3.49	0.00	-2.69	1.02
1-10	0.00	-9.71	4.11	0.00	-2.88	1.03
Top						
Member 2: (Top Slab)						
Left						
2- 0	0.00	-9.72	4.12	3.17	0.00	0.00
2- 1	3.10	-9.72	4.12	2.48	0.00	0.00
2- 2	5.48	-9.72	4.12	1.86	0.00	0.00
2- 3	7.19	-9.72	4.12	1.24	0.00	0.00
2- 4	8.21	-9.72	4.12	0.62	0.00	0.00
2- 5	8.55	-9.72	4.12	0.00	0.00	0.00
2- 6	8.21	-9.72	4.12	-0.62	0.00	0.00
2- 7	7.19	-9.72	4.12	-1.24	0.00	0.00
2- 8	5.48	-9.72	4.12	-1.86	0.00	0.00
2- 9	3.09	-9.72	4.12	-2.48	0.00	0.00
2-10	0.00	-9.72	4.12	-3.17	0.00	0.00
Right						

Live Load Parameters:

Traffic Direction is Parallel to Main Reinforcement
Distribution Width : 8.38 ft
Impact Factor : 1.10
Lane Load : 0.053 k/ft Distribution Width : 24.38 ft

Analysis Truck, HS-20

Vehicle	Axle No.	Weight (k/ft)	Length (ft)	Dist. From Previous (ft)
Truck	1	0.240	4.38	
	2	0.961	4.38	14.00
	3	0.961	4.38	14.00

Tandem	1	0.571	9.21

Pinned/Roller Reactions Applied to Structure: (service load values, k/unit width) (Fill Depth = 2.50 ft)

```
                 ____________
                |            |
                |            |
                |            |
                |            |
           ---->|            |<----
                A            A
                |            |
                |            |
```

	Vertical	Horizontal	Horizonal Movement of Left Node (in)
Dead Load	3.77	0.00	-0.020
Soil Pressure	0.00	0.00	-0.041
Water Pressure	0.00	0.00	-0.121
Live Load	3.37	0.00	-0.045
Without LL	3.77	0.00	0.083
With LL	7.13	0.00	0.039

Note: Reactions as shown - positive, movement to right - positive

Truck Positions That Cause Maximum Results:

Maximum +Moment in Top Slab

Vehicle	Axle No.	Weight (k)	Length (ft)	Dist. From Left End (ft)
Truck	1	0.240	4.38	19.51
	2	0.961	4.38	5.51
	3	0.961	4.38	-8.49

Maximum +Moment : 9.27 k-ft
Corresponding Moment at End : 0.00 k-ft

Maximum +Shear in Top Slab

Truck	1	0.240	4.38	22.82
	2	0.961	4.38	8.82
	3	0.961	4.38	-5.18

Maximum +Shear : -3.37 k
Corresponding Shear at Mid : 0.84 k

Maximum Deflection in Top Slab = 0.009 in
Truck 1 0.00 5.51

Maximum +Moment in Top Slab

Maximum +Moment : 83333.34 k-ft
Corresponding Moment at End : 0.00 k-ft

Maximum +Shear in Top Slab
Tandem 1 0.571 9.21 6.41
Maximum +Shear : -3.06 k
Corresponding Shear at Mid : 0.08 k

Maximum -Moment in Top Slab

Vehicle	Axle No.	Weight (k)	Length (ft)	Dist. From Left End (ft)
Truck	1	0.240	4.38	16.19
	2	0.961	4.38	2.19
	3	0.961	4.38	-11.81

Maximum -Moment : 3.37 k-ft
Corresponding Moment at Mid : -0.84 k-ft

Maximum -Shear in Top Slab

Truck	1	0.240	4.38	19.51
	2	0.961	4.38	5.51
	3	0.961	4.38	-8.49

Maximum -Shear : 0.00 k
Corresponding Shear at Mid : 0.00 k

Maximum -Moment in Top Slab
Tandem 1 0.571 9.21 4.60
Maximum -Moment : 3.06 k-ft
Corresponding Moment at Mid : -0.08 k-ft

Maximum -Shear in Top Slab
Tandem 1 0.571 9.21 5.51
Maximum -Shear : 0.00 k
Corresponding Shear at Mid : 0.00 k

Unfactored Moments and Shears due to Truck Loads: (k-ft, k)

Truck Tandem Lane

M-PT	Mll+	Mll-	Vll+	Vll-	Mll+	Mll-	Vll+	Vll-	Mll+	Mll-	Vll+	Vll-
Member 1: (Exterior Wall)												
Bottom												
1- 0	0.00	0.00	0.00	0.00	0.00	0.00	0.00	0.00	0.00	0.00	0.00	0.00
1- 1	0.00	0.00	0.00	0.00	0.00	0.00	0.00	0.00	0.00	0.00	0.00	0.00
1- 2	0.00	0.00	0.00	0.00	0.00	0.00	0.00	0.00	0.00	0.00	0.00	0.00
1- 3	0.00	0.00	0.00	0.00	0.00	0.00	0.00	0.00	0.00	0.00	0.00	0.00
1- 4	0.00	0.00	0.00	0.00	0.00	0.00	0.00	0.00	0.00	0.00	0.00	0.00
1- 5	0.00	0.00	0.00	0.00	0.00	0.00	0.00	0.00	0.00	0.00	0.00	0.00
1- 6	0.00	0.00	0.00	0.00	0.00	0.00	0.00	0.00	0.00	0.00	0.00	0.00
1- 7	0.00	0.00	0.00	0.00	0.00	0.00	0.00	0.00	0.00	0.00	0.00	0.00
1- 8	0.00	0.00	0.00	0.00	0.00	0.00	0.00	0.00	0.00	0.00	0.00	0.00
1- 9	0.00	0.00	0.00	0.00	0.00	0.00	0.00	0.00	0.00	0.00	0.00	0.00
1-10	0.00	0.00	0.00	0.00	0.00	0.00	0.00	0.00	0.00	0.00	0.00	0.00
Top												
Member 2: (Top Slab)												
Left												
2- 0	0.00	0.00	3.37	0.00	0.00	0.00	3.06	0.00	0.00	0.00	0.29	0.00
2- 1	3.33	0.00	2.95	-0.05	3.03	0.00	2.53	-0.03	0.29	0.00	0.23	0.00
2- 2	5.91	0.00	2.53	-0.21	5.39	0.00	2.01	-0.13	0.51	0.00	0.19	-0.01
2- 3	7.77	0.00	2.11	-0.48	7.07	0.00	1.54	-0.28	0.67	0.00	0.14	-0.03
2- 4	8.90	0.00	1.69	-0.85	8.08	0.00	1.13	-0.50	0.76	0.00	0.10	-0.05
2- 5	9.27	0.00	1.27	-1.27	8.42	0.00	0.79	-0.79	0.80	0.00	0.07	-0.07
2- 6	8.90	0.00	0.85	-1.69	8.08	0.00	0.50	-1.13	0.76	0.00	0.05	-0.10
2- 7	7.77	0.00	0.48	-2.11	7.07	0.00	0.28	-1.54	0.67	0.00	0.03	-0.14
2- 8	5.91	0.00	0.21	-2.53	5.39	0.00	0.13	-2.01	0.51	0.00	0.01	-0.19
2- 9	3.33	0.00	0.05	-2.95	3.03	0.00	0.03	-2.53	0.29	0.00	0.00	-0.23
2-10	0.00	0.00	0.00	-3.37	0.00	0.00	0.00	-3.06	0.00	0.00	0.00	-0.29
Right												

Serviceability Check: Crack Control

Bar Mark	Location	Moment (k-ft)	Fss (ksi)	Allow (ksi)
A1	Top Corner Bar	-4.2	6.94	32.89
A100	Top Slab (int)	17.1	27.57	32.89
A300	Top Slab (ext)	0.0	0.00	99.99
B1	Ext Wall (int)	0.0	0.00	32.89
B2	Ext Wall (ext)	0.0	0.00	0.00

Serviceability Check: Live Load Deflection

Deflection Ratio of Top Slab = 1/12889 (Limit = 1/800)

Strength Limit State at Critical Sections: Flexure

Member 1: (Exterior Wall), Thickness = 8.00 in

Loc	Dist. (in)	Design Moment (k-ft)	Corr. A. F. (k)	Mu (k-ft)	ds (in)	Ma (k-ft)	phi	As (in2)	1.2Mcr (k-ft)	Load Ratings IR	OR
BOT	0.00	-0.34	4.11	0.00	6.63	0.83	0.95	0.00	6.79	NC	NC
MID	28.80	0.00	4.11	22.15	6.63	22.67	0.95	0.75	6.79	NC	NC
MID-	36.00	-1.84	11.43	22.37	6.69	23.82	0.95	0.75	6.79	NC	NC
TOP	10.00	-5.43	11.43	22.15	6.63	23.60	0.95	0.75	6.79	NC	NC

Member 2: (Top Slab), Thickness = 12.00 in

Loc	Dist. (in)	Design Moment (k-ft)	Corr. A. F. (k)	Mu (k-ft)	ds (in)	Ma (k-ft)	phi	As (in2)	1.2Mcr (k-ft)	Load Ratings IR	OR
LT	6.00	-5.45	2.41	32.90	9.63	33.50	0.95	0.75	15.27	NC	NC
MID	66.06	30.28	0.53	36.48	10.63	36.60	0.95	0.75	15.27	1.31	2.19
RT	6.00	-5.46	2.41	32.90	9.63	33.50	0.95	0.75	15.27	NC	NC

Note: Mu - Resisting moment under pure flexure, Ma - Allowable moment under applied axial load

Strength Limit State at Critical Sections: Vertical Shear

Member 1: (Exterior Wall), Thickness = 8.00 in

Loc	Dist. (in)	Design Shear (k)	Corr. Moment (k-ft)	Corr. A. F. (k)	Dv (in)	phi*Vn (k)	Beta	Theta	Vc (k)	Vs (k)	Av (in2)	Max. Spac (in)	Load Ratings IR	OR
BOT	0.00	0.00	-0.3	4.11	6.63	15.18	n/a	n/a	16.86d	0.00	0.00	0.00	NC	NC
MID	36.00	0.11	0.0	4.11	6.63	15.18	n/a	n/a	16.86d	0.00	0.00	0.00	NC	NC
MID-	36.00	0.11	-1.8	11.43	6.69	15.32	n/a	n/a	17.02d	0.00	0.00	0.00	NC	NC
TOP	12.44	-3.30	-5.4	11.43	6.63	15.18	n/a	n/a	16.86d	0.00	0.00	0.00	NC	NC

Member 2: (Top Slab), Thickness = 12.00 in

Loc	Dist. (in)	Design Shear (k)	Corr. Moment (k-ft)	Corr. A. F. (k)	Dv (in)	phi*Vn (k)	Beta	Theta	Vc (k)	Vs (k)	Av (in2)	Max. Spac (in)	Load Ratings IR	OR
LT	13.44	9.59	-5.5	2.41	9.63	22.05	n/a	n/a	24.50d	0.00	0.00	0.00	NC	NC
MID	66.06	2.75	30.3	0.53	10.63	24.34	n/a	n/a	27.05d	0.00	0.00	0.00	8.85	14.79
RT	13.44	9.59	-5.5	2.41	9.63	22.05	n/a	n/a	24.50d	0.00	0.00	0.00	NC	NC

Vc Calculation By: a - Iterative Beta, b - Constant Beta, c - Box Culvert, d - Standard/Arema

Licensee: Gary K. Munkelt & Associates, LLC
ETCulvert v.3.31 Analysis and design of culverts
Copyright © 2010-2016 Eriksson Software, Inc.(www.LRFD.com)
Filename: Shea - Boydes Crossing.etc

Load Combination Results at Tenth Points: (k-ft, k)(Fill Depth = 2.50 ft)

M-PT	+Moment	-Moment	+Axial	-Axial	+Shear	-Shear
Member 1: (Exterior Wall)						
Bottom						
1- 0	0.000	0.000	4.115	11.427	0.000	0.000
1- 1	0.001	-0.074	4.115	11.427	0.004	-0.501
1- 2	0.001	-0.295	4.115	11.427	-0.005	-0.973
1- 3	-0.008	-0.663	4.115	11.427	-0.026	-1.418
1- 4	-0.035	-1.177	4.115	11.427	-0.061	-1.835
1- 5	-0.085	-1.837	4.115	11.427	-0.108	-2.223
1- 6	-0.168	-2.640	4.115	11.427	-0.167	-2.583
1- 7	-0.290	-3.587	4.115	11.427	-0.240	-2.916
1- 8	-0.459	-4.677	4.115	11.427	-0.325	-3.220
1- 9	-0.684	-5.909	4.115	11.427	-0.423	-3.496
1-10	-0.970	-7.281	4.115	11.427	-0.534	-3.744
Top						
Member 2: (Top Slab)						
Left						
2- 0	-0.964	-7.282	0.534	2.406	11.427	4.115
2- 1	10.299	-3.257	0.534	2.406	9.622	3.108
2- 2	19.006	-0.153	0.534	2.406	7.904	1.958
2- 3	25.243	2.065	0.534	2.406	6.186	0.578
2- 4	29.025	3.395	0.534	2.406	4.468	-1.031
2- 5	30.284	3.839	0.534	2.406	2.749	-2.749
2- 6	29.023	3.394	0.534	2.406	1.031	-4.468
2- 7	25.241	2.063	0.534	2.406	-0.578	-6.186
2- 8	19.004	-0.154	0.534	2.406	-1.958	-7.904
2- 9	10.297	-3.259	0.534	2.406	-3.108	-9.622
2-10	-0.966	-7.284	0.534	2.406	-4.115	-11.427
Right						

Analysis Results: Fill Depth = 3.00 ft

Load Parameters:

Fe = 1.05

Applied Horizontal Loads: (k/ft)

Load Description	Bottom of Wall	Top of Wall
Horizontal Earth Load	0.570	0.210
Live Load Surcharge	0.120	0.120
Internal Water Pressure	0.343	0.000

Unfactored Moments and Shears due to All Loads: (k-ft, k) (Fill Depth = 3.00 ft)

M-PT	Mdl	Msp	Mwp	Vdl	Vsp	Vwp
Member 1: (Exterior Wall)						
Bottom						
1- 0	0.00	0.00	0.00	0.00	0.00	0.00
1- 1	0.00	-0.12	0.06	0.00	-0.40	0.20
1- 2	0.00	-0.48	0.23	0.00	-0.78	0.37
1- 3	0.00	-1.06	0.50	0.00	-1.14	0.53
1- 4	0.00	-1.84	0.85	0.00	-1.48	0.66
1- 5	0.00	-2.83	1.28	0.00	-1.80	0.77
1- 6	0.00	-4.00	1.77	0.00	-2.10	0.86
1- 7	0.00	-5.34	2.31	0.00	-2.37	0.94
1- 8	0.00	-6.83	2.89	0.00	-2.62	0.99
1- 9	0.00	-8.48	3.49	0.00	-2.85	1.02
1-10	0.00	-10.25	4.11	0.00	-3.06	1.03
Top						
Member 2: (Top Slab)						
Left						
2- 0	0.00	-10.26	4.12	3.53	0.00	0.00
2- 1	3.45	-10.26	4.12	2.77	0.00	0.00
2- 2	6.12	-10.26	4.12	2.08	0.00	0.00
2- 3	8.03	-10.26	4.12	1.38	0.00	0.00
2- 4	9.17	-10.26	4.12	0.69	0.00	0.00
2- 5	9.55	-10.26	4.12	0.00	0.00	0.00
2- 6	9.17	-10.26	4.12	-0.69	0.00	0.00
2- 7	8.02	-10.26	4.12	-1.38	0.00	0.00
2- 8	6.12	-10.26	4.12	-2.08	0.00	0.00
2- 9	3.45	-10.26	4.12	-2.77	0.00	0.00
2-10	0.00	-10.26	4.12	-3.53	0.00	0.00
Right						

Live Load Parameters:

Traffic Direction is Parallel to Main Reinforcement
Distribution Width : 9.25 ft
Impact Factor : 1.00
Lane Load : 0.051 k/ft Distribution Width : 25.25 ft

Analysis Truck, HS-20

Vehicle	Axle No.	Weight (k/ft)	Length (ft)	Dist. From Previous (ft)
Truck	1	0.165	5.25	
	2	0.659	5.25	14.00
	3	0.659	5.25	14.00

Tandem	1	0.436	10.08

Pinned/Roller Reactions Applied to Structure: (service load values, k/unit width) (Fill Depth = 3.00 ft)

```
                 ___________
                |           |
                |           |
                |           |
                |           |
           ---->|           |<----
                A           A
                |           |
                |           |
```

	Vertical	Horizontal	Horizonal Movement of Left Node (in)
Dead Load	4.13	0.00	-0.020
Soil Pressure	0.00	0.00	-0.049
Water Pressure	0.00	0.00	-0.121
Live Load	2.63	0.00	-0.040
Without LL	4.13	0.00	0.090
With LL	6.76	0.00	0.050

Note: Reactions as shown - positive, movement to right - positive

Truck Positions That Cause Maximum Results:

Maximum +Moment in Top Slab

Vehicle	Axle No.	Weight (k)	Length (ft)	Dist. From Left End (ft)
Truck	1	0.165	5.25	19.51
	2	0.659	5.25	5.51
	3	0.659	5.25	-8.49

Maximum +Moment : 7.25 k-ft
Corresponding Moment at End : 0.00 k-ft

Maximum -Moment in Top Slab

Vehicle	Axle No.	Weight (k)	Length (ft)	Dist. From Left End (ft)
Truck	1	0.165	5.25	16.63
	2	0.659	5.25	2.63
	3	0.659	5.25	-11.38

Maximum -Moment : 2.63 k-ft
Corresponding Moment at Mid : -0.82 k-ft

Maximum +Shear in Top Slab

Truck	1	0.165	5.25	22.39
	2	0.659	5.25	8.39
	3	0.659	5.25	-5.61

Maximum +Shear : -2.63 k
Corresponding Shear at Mid : 0.82 k

Maximum -Shear in Top Slab

Truck	1	0.165	5.25	33.51
	2	0.659	5.25	19.51
	3	0.659	5.25	5.51

Maximum -Shear : 0.00 k
Corresponding Shear at Mid : 0.00 k

Maximum Deflection in Top Slab = 0.009 in
Truck 1 0.00 5.51

Maximum +Moment in Top Slab

Maximum +Moment : 83333.34 k-ft
Corresponding Moment at End : 0.00 k-ft

Maximum +Shear in Top Slab
Tandem 1 0.436 10.08 5.97
Maximum +Shear : -2.38 k
Corresponding Shear at Mid : 0.02 k

Maximum -Moment in Top Slab
Tandem 1 0.436 10.08 5.04
Maximum -Moment : 2.38 k-ft
Corresponding Moment at Mid : -0.02 k-ft

Maximum -Shear in Top Slab
Tandem 1 0.436 10.08 5.51
Maximum -Shear : 0.00 k
Corresponding Shear at Mid : 0.00 k

Unfactored Moments and Shears due to Truck Loads: (k-ft, k)

Truck Tandem Lane

M-PT	Mll+	Mll-	Vll+	Vll-	Mll+	Mll-	Vll+	Vll-	Mll+	Mll-	Vll+	Vll-
Member 1: (Exterior Wall)												
Bottom												
1- 0	0.00	0.00	0.00	0.00	0.00	0.00	0.00	0.00	0.00	0.00	0.00	0.00
1- 1	0.00	0.00	0.00	0.00	0.00	0.00	0.00	0.00	0.00	0.00	0.00	0.00
1- 2	0.00	0.00	0.00	0.00	0.00	0.00	0.00	0.00	0.00	0.00	0.00	0.00
1- 3	0.00	0.00	0.00	0.00	0.00	0.00	0.00	0.00	0.00	0.00	0.00	0.00
1- 4	0.00	0.00	0.00	0.00	0.00	0.00	0.00	0.00	0.00	0.00	0.00	0.00
1- 5	0.00	0.00	0.00	0.00	0.00	0.00	0.00	0.00	0.00	0.00	0.00	0.00
1- 6	0.00	0.00	0.00	0.00	0.00	0.00	0.00	0.00	0.00	0.00	0.00	0.00
1- 7	0.00	0.00	0.00	0.00	0.00	0.00	0.00	0.00	0.00	0.00	0.00	0.00
1- 8	0.00	0.00	0.00	0.00	0.00	0.00	0.00	0.00	0.00	0.00	0.00	0.00
1- 9	0.00	0.00	0.00	0.00	0.00	0.00	0.00	0.00	0.00	0.00	0.00	0.00
1-10	0.00	0.00	0.00	0.00	0.00	0.00	0.00	0.00	0.00	0.00	0.00	0.00
Top												
Member 2: (Top Slab)												
Left												
2- 0	0.00	0.00	2.63	0.00	0.00	0.00	2.38	0.00	0.00	0.00	0.28	0.00
2- 1	2.61	0.00	2.29	-0.04	2.36	0.00	1.94	-0.02	0.28	0.00	0.23	0.00
2- 2	4.64	0.00	1.94	-0.15	4.19	0.00	1.54	-0.10	0.49	0.00	0.18	-0.01
2- 3	6.09	0.00	1.60	-0.33	5.51	0.00	1.18	-0.22	0.65	0.00	0.14	-0.03
2- 4	6.96	0.00	1.25	-0.58	6.30	0.00	0.86	-0.38	0.74	0.00	0.10	-0.04
2- 5	7.25	0.00	0.90	-0.90	6.56	0.00	0.60	-0.60	0.77	0.00	0.07	-0.07
2- 6	6.96	0.00	0.58	-1.25	6.30	0.00	0.38	-0.86	0.74	0.00	0.04	-0.10
2- 7	6.09	0.00	0.33	-1.60	5.51	0.00	0.22	-1.18	0.65	0.00	0.03	-0.14
2- 8	4.64	0.00	0.15	-1.94	4.19	0.00	0.10	-1.54	0.49	0.00	0.01	-0.18
2- 9	2.61	0.00	0.04	-2.29	2.36	0.00	0.02	-1.94	0.28	0.00	0.00	-0.23
2-10	0.00	0.00	0.00	-2.63	0.00	0.00	0.00	-2.38	0.00	0.00	0.00	-0.28
Right												

Serviceability Check: Crack Control

Bar Mark	Location	Moment (k-ft)	Fss (ksi)	Allow (ksi)
A1	Top Corner Bar	-4.6	8.21	32.89
A100	Top Slab (int)	15.8	25.40	32.89
A300	Top Slab (ext)	0.0	0.00	99.99
B1	Ext Wall (int)	-0.1	0.00	32.89
B2	Ext Wall (ext)	0.0	0.00	0.00

Serviceability Check: Live Load Deflection

Deflection Ratio of Top Slab = 1/12889 (Limit = 1/800)

Strength Limit State at Critical Sections: Flexure

Member 1: (Exterior Wall), Thickness = 8.00 in

Loc	Dist. (in)	Design Moment (k-ft)	Corr. A. F. (k)	Mu (k-ft)	ds (in)	Ma (k-ft)	phi	As (in2)	1.2Mcr (k-ft)	Load Ratings IR	OR
BOT	0.00	-0.38	4.58	0.00	6.63	0.93	0.95	0.00	6.79	NC	NC
MID	28.80	0.00	4.58	22.15	6.63	22.73	0.95	0.75	6.79	NC	NC
MID-	36.00	-2.01	10.30	22.37	6.69	23.67	0.95	0.75	6.79	NC	NC
TOP	10.00	-5.95	10.30	22.15	6.63	23.46	0.95	0.75	6.79	NC	NC

Member 2: (Top Slab), Thickness = 12.00 in

Loc	Dist. (in)	Design Moment (k-ft)	Corr. A. F. (k)	Mu (k-ft)	ds (in)	Ma (k-ft)	phi	As (in2)	1.2Mcr (k-ft)	Load Ratings IR	OR
LT	6.00	-5.95	2.64	32.90	9.63	33.56	0.95	0.75	15.27	NC	NC
MID	66.06	26.84	0.65	36.48	10.63	36.63	0.95	0.75	15.27	1.62	2.71
RT	6.00	-5.95	2.64	32.90	9.63	33.56	0.95	0.75	15.27	NC	NC

Note: Mu - Resisting moment under pure flexure, Ma - Allowable moment under applied axial load

Strength Limit State at Critical Sections: Vertical Shear

Member 1: (Exterior Wall), Thickness = 8.00 in

Loc	Dist. (in)	Design Shear (k)	Corr. Moment (k-ft)	Corr. A. F. (k)	Dv (in)	phi*Vn (k)	Beta	Theta	Vc (k)	Vs (k)	Av (in2)	Max. Spac (in)	Load Ratings IR	OR
BOT	0.00	0.00	-0.4	4.58	6.63	15.18	n/a	n/a	16.86d	0.00	0.00	0.00	NC	NC
MID	36.00	0.17	0.0	4.58	6.63	15.18	n/a	n/a	16.86d	0.00	0.00	0.00	NC	NC
MID-	36.00	0.17	-2.0	10.30	6.69	15.32	n/a	n/a	17.02d	0.00	0.00	0.00	NC	NC
TOP	12.44	-3.49	-6.0	10.30	6.63	15.18	n/a	n/a	16.86d	0.00	0.00	0.00	NC	NC

Member 2: (Top Slab), Thickness = 12.00 in

Loc	Dist. (in)	Design Shear (k)	Corr. Moment (k-ft)	Corr. A. F. (k)	Dv (in)	phi*Vn (k)	Beta	Theta	Vc (k)	Vs (k)	Av (in2)	Max. Spac (in)	Load Ratings IR	OR
LT	13.44	8.54	-5.9	2.64	9.63	22.05	n/a	n/a	24.50d	0.00	0.00	0.00	NC	NC
MID	66.06	1.96	26.8	0.65	10.63	24.34	n/a	n/a	27.05d	0.00	0.00	0.00	12.39	20.69
RT	13.44	8.54	-5.9	2.64	9.63	22.05	n/a	n/a	24.50d	0.00	0.00	0.00	NC	NC

Vc Calculation By: a - Iterative Beta, b - Constant Beta, c - Box Culvert, d - Standard/Arema

Load Combination Results at Tenth Points: (k-ft, k)(Fill Depth = 3.00 ft)

M-PT	+Moment	-Moment	+Axial	-Axial	+Shear	-Shear
Member 1: (Exterior Wall)						
Bottom						
1- 0	0.000	0.000	4.585	10.305	0.000	0.000
1- 1	-0.002	-0.081	4.585	10.305	-0.008	-0.524
1- 2	-0.013	-0.323	4.585	10.305	-0.028	-1.020
1- 3	-0.040	-0.727	4.585	10.305	-0.061	-1.488
1- 4	-0.091	-1.290	4.585	10.305	-0.107	-1.928
1- 5	-0.173	-2.012	4.585	10.305	-0.166	-2.340
1- 6	-0.294	-2.893	4.585	10.305	-0.238	-2.724
1- 7	-0.462	-3.931	4.585	10.305	-0.322	-3.079
1- 8	-0.684	-5.126	4.585	10.305	-0.419	-3.407
1- 9	-0.968	-6.477	4.585	10.305	-0.528	-3.707
1-10	-1.321	-7.983	4.585	10.305	-0.651	-3.978
Top						
Member 2: (Top Slab)						
Left						
2- 0	-1.315	-7.984	0.651	2.640	10.305	4.585
2- 1	8.843	-3.494	0.651	2.640	8.567	3.520
2- 2	16.717	-0.027	0.651	2.640	6.917	2.384
2- 3	22.342	2.449	0.651	2.640	5.266	1.090
2- 4	25.718	3.935	0.651	2.640	3.615	-0.360
2- 5	26.844	4.430	0.651	2.640	1.965	-1.965
2- 6	25.717	3.933	0.651	2.640	0.360	-3.615
2- 7	22.340	2.448	0.651	2.640	-1.090	-5.266
2- 8	16.715	-0.029	0.651	2.640	-2.384	-6.917
2- 9	8.841	-3.495	0.651	2.640	-3.520	-8.567
2-10	-1.317	-7.986	0.651	2.640	-4.585	-10.305
Right						

Analysis Results: Fill Depth = 3.50 ft

Load Parameters:

Fe = 1.06

Applied Horizontal Loads: (k/ft)

Load Description	Bottom of Wall	Top of Wall
Horizontal Earth Load	0.600	0.240
Live Load Surcharge	0.120	0.120
Internal Water Pressure	0.343	0.000

Unfactored Moments and Shears due to All Loads: (k-ft, k) (Fill Depth = 3.50 ft)

M-PT	Mdl	Msp	Mwp	Vdl	Vsp	Vwp
Member 1: (Exterior Wall)						
Bottom						
1- 0	0.00	0.00	0.00	0.00	0.00	0.00
1- 1	0.00	-0.13	0.06	0.00	-0.42	0.20
1- 2	0.00	-0.50	0.23	0.00	-0.82	0.37
1- 3	0.00	-1.10	0.50	0.00	-1.20	0.53
1- 4	0.00	-1.93	0.85	0.00	-1.56	0.66
1- 5	0.00	-2.96	1.28	0.00	-1.89	0.77
1- 6	0.00	-4.19	1.77	0.00	-2.20	0.86
1- 7	0.00	-5.60	2.31	0.00	-2.49	0.94
1- 8	0.00	-7.18	2.89	0.00	-2.76	0.99
1- 9	0.00	-8.91	3.49	0.00	-3.01	1.02
1-10	0.00	-10.79	4.11	0.00	-3.24	1.03
Top						
Member 2: (Top Slab)						
Left						
2- 0	0.00	-10.80	4.12	3.89	0.00	0.00
2- 1	3.82	-10.80	4.12	3.06	0.00	0.00
2- 2	6.77	-10.80	4.12	2.30	0.00	0.00
2- 3	8.87	-10.80	4.12	1.53	0.00	0.00
2- 4	10.14	-10.80	4.12	0.77	0.00	0.00
2- 5	10.56	-10.80	4.12	0.00	0.00	0.00
2- 6	10.14	-10.80	4.12	-0.77	0.00	0.00
2- 7	8.87	-10.80	4.12	-1.53	0.00	0.00
2- 8	6.77	-10.80	4.12	-2.30	0.00	0.00
2- 9	3.82	-10.80	4.12	-3.06	0.00	0.00
2-10	0.00	-10.80	4.12	-3.89	0.00	0.00
Right						

Live Load Parameters:

Traffic Direction is Parallel to Main Reinforcement
Distribution Width : 10.13 ft
Impact Factor : 1.00
Lane Load : 0.049 k/ft Distribution Width : 26.13 ft

Analysis Truck, HS-20

Vehicle	Axle No.	Weight (k/ft)	Length (ft)	Dist. From Previous (ft)
Truck	1	0.129	6.13	
	2	0.516	6.13	14.00
	3	0.516	6.13	14.00

Tandem 1 0.371 10.96

Pinned/Roller Reactions Applied to Structure: (service load values, k/unit width) (Fill Depth = 3.50 ft)

```
                 ___________
                |           |
                |           |
                |           |
                |           |
           ---->|           |<----
                A           A
                |           |
                |           |
```

	Vertical	Horizontal	Horizonal Movement of Left Node (in)
Dead Load	4.49	0.00	-0.020
Soil Pressure	0.00	0.00	-0.058
Water Pressure	0.00	0.00	-0.121
Live Load	2.28	0.00	-0.039
Without LL	4.49	0.00	0.096
With LL	6.78	0.00	0.057

Note: Reactions as shown - positive, movement to right - positive

Truck Positions That Cause Maximum Results:

Maximum +Moment in Top Slab

Vehicle	Axle No.	Weight (k)	Length (ft)	Dist. From Left End (ft)
Truck	1	0.129	6.13	19.51
	2	0.516	6.13	5.51
	3	0.516	6.13	-8.49

Maximum +Moment : 6.28 k-ft
Corresponding Moment at End : 0.00 k-ft

Maximum -Moment in Top Slab

Vehicle	Axle No.	Weight (k)	Length (ft)	Dist. From Left End (ft)
Truck	1	0.129	6.13	17.06
	2	0.516	6.13	3.06
	3	0.516	6.13	-10.94

Maximum -Moment : 2.28 k-ft
Corresponding Moment at Mid : -0.56 k-ft

Maximum +Shear in Top Slab

Truck	1	0.129	6.13	21.95
	2	0.516	6.13	7.95
	3	0.516	6.13	-6.05

Maximum +Shear : -2.28 k
Corresponding Shear at Mid : 0.56 k

Maximum -Shear in Top Slab

Truck	1	0.129	6.13	33.51
	2	0.516	6.13	19.51
	3	0.516	6.13	5.51

Maximum -Shear : 0.00 k
Corresponding Shear at Mid : 0.00 k

Maximum Deflection in Top Slab = 0.009 in
Truck 1 0.00 5.51

Maximum +Moment in Top Slab

Maximum +Moment : 83333.34 k-ft
Corresponding Moment at End : 0.00 k-ft

Maximum -Moment in Top Slab

Tandem 1 0.371 10.96 5.48
Maximum -Moment : 2.04 k-ft
Corresponding Moment at Mid : 0.00 k-ft

Maximum +Shear in Top Slab

Tandem 1 0.371 10.96 5.53
Maximum +Shear : -2.04 k
Corresponding Shear at Mid : 0.00 k

Maximum -Shear in Top Slab

Tandem 1 0.371 10.96 5.51
Maximum -Shear : 0.00 k
Corresponding Shear at Mid : 0.00 k

Unfactored Moments and Shears due to Truck Loads: (k-ft, k)

Truck Tandem Lane

M-PT	Mll+	Mll-	Vll+	Vll-	Mll+	Mll-	Vll+	Vll-	Mll+	Mll-	Vll+	Vll-
Member 1: (Exterior Wall)												
Bottom												
1- 0	0.00	0.00	0.00	0.00	0.00	0.00	0.00	0.00	0.00	0.00	0.00	0.00
1- 1	0.00	0.00	0.00	0.00	0.00	0.00	0.00	0.00	0.00	0.00	0.00	0.00
1- 2	0.00	0.00	0.00	0.00	0.00	0.00	0.00	0.00	0.00	0.00	0.00	0.00
1- 3	0.00	0.00	0.00	0.00	0.00	0.00	0.00	0.00	0.00	0.00	0.00	0.00
1- 4	0.00	0.00	0.00	0.00	0.00	0.00	0.00	0.00	0.00	0.00	0.00	0.00
1- 5	0.00	0.00	0.00	0.00	0.00	0.00	0.00	0.00	0.00	0.00	0.00	0.00
1- 6	0.00	0.00	0.00	0.00	0.00	0.00	0.00	0.00	0.00	0.00	0.00	0.00
1- 7	0.00	0.00	0.00	0.00	0.00	0.00	0.00	0.00	0.00	0.00	0.00	0.00
1- 8	0.00	0.00	0.00	0.00	0.00	0.00	0.00	0.00	0.00	0.00	0.00	0.00
1- 9	0.00	0.00	0.00	0.00	0.00	0.00	0.00	0.00	0.00	0.00	0.00	0.00
1-10	0.00	0.00	0.00	0.00	0.00	0.00	0.00	0.00	0.00	0.00	0.00	0.00
Top												
Member 2: (Top Slab)												
Left												
2- 0	0.00	0.00	2.28	0.00	0.00	0.00	2.04	0.00	0.00	0.00	0.27	0.00
2- 1	2.26	0.00	1.97	-0.03	2.03	0.00	1.66	-0.02	0.27	0.00	0.22	0.00
2- 2	4.02	0.00	1.65	-0.11	3.60	0.00	1.31	-0.08	0.48	0.00	0.17	-0.01
2- 3	5.27	0.00	1.33	-0.26	4.73	0.00	1.00	-0.18	0.62	0.00	0.13	-0.02
2- 4	6.03	0.00	1.02	-0.45	5.40	0.00	0.74	-0.33	0.71	0.00	0.10	-0.04
2- 5	6.28	0.00	0.71	-0.71	5.63	0.00	0.51	-0.51	0.74	0.00	0.07	-0.07
2- 6	6.03	0.00	0.45	-1.02	5.40	0.00	0.33	-0.74	0.71	0.00	0.04	-0.10
2- 7	5.27	0.00	0.26	-1.33	4.73	0.00	0.18	-1.00	0.62	0.00	0.02	-0.13
2- 8	4.02	0.00	0.11	-1.65	3.60	0.00	0.08	-1.31	0.48	0.00	0.01	-0.17
2- 9	2.26	0.00	0.03	-1.97	2.03	0.00	0.02	-1.66	0.27	0.00	0.00	-0.22
2-10	0.00	0.00	0.00	-2.28	0.00	0.00	0.00	-2.04	0.00	0.00	0.00	-0.27
Right												

Serviceability Check: Crack Control

Bar Mark	Location	Moment (k-ft)	Fss (ksi)	Allow (ksi)
A1	Top Corner Bar	-5.0	9.26	32.89
A100	Top Slab (int)	15.6	24.96	32.89
A300	Top Slab (ext)	0.0	0.00	99.99
B1	Ext Wall (int)	-0.1	0.00	32.89
B2	Ext Wall (ext)	0.0	0.00	0.00

Serviceability Check: Live Load Deflection

Deflection Ratio of Top Slab = 1/12889 (Limit = 1/800)

Strength Limit State at Critical Sections: Flexure

Member 1: (Exterior Wall), Thickness = 8.00 in

Loc	Dist. (in)	Design Moment (k-ft)	Corr. A. F. (k)	Mu (k-ft)	ds (in)	Ma (k-ft)	phi	As (in2)	1.2Mcr (k-ft)	Load Ratings IR	Load Ratings OR
BOT	0.00	0.42	5.06	0.00	6.63	1.03	0.95	0.00	6.79	NC	NC
MID	28.80	0.00	5.06	22.15	6.63	22.79	0.95	0.75	6.79	NC	NC
MID-	36.00	-2.19	10.01	22.37	6.69	23.64	0.95	0.75	6.79	NC	NC
TOP	10.00	-6.47	10.01	22.15	6.63	23.42	0.95	0.75	6.79	NC	NC

Member 2: (Top Slab), Thickness = 12.00 in

Loc	Dist. (in)	Design Moment (k-ft)	Corr. A. F. (k)	Mu (k-ft)	ds (in)	Ma (k-ft)	phi	As (in2)	1.2Mcr (k-ft)	Load Ratings IR	Load Ratings OR
LT	6.00	-6.43	2.87	32.90	9.63	33.62	0.95	0.75	15.27	NC	NC
MID	66.06	25.70	0.77	36.48	10.63	36.66	0.95	0.75	15.27	1.80	3.01
RT	6.00	-6.43	2.87	32.90	9.63	33.62	0.95	0.75	15.27	NC	NC

Note: Mu - Resisting moment under pure flexure, Ma - Allowable moment under applied axial load

Strength Limit State at Critical Sections: Vertical Shear

Member 1: (Exterior Wall), Thickness = 8.00 in

Loc	Dist. (in)	Design Shear (k)	Corr. Moment (k-ft)	Corr. A. F. (k)	Dv (in)	phi*Vn (k)	Beta	Theta	Vc (k)	Vs (k)	Av (in2)	Max. Spac (in)	Load Ratings IR	Load Ratings OR
BOT	0.00	0.00	0.4	5.06	6.63	15.18	n/a	n/a	16.86d	0.00	0.00	0.00	NC	NC
MID	36.00	0.22	0.0	5.06	6.63	15.18	n/a	n/a	16.86d	0.00	0.00	0.00	NC	NC
MID-	36.00	0.22	-2.2	10.01	6.69	15.32	n/a	n/a	17.02d	0.00	0.00	0.00	NC	NC
TOP	12.44	-3.68	-6.5	10.01	6.63	15.18	n/a	n/a	16.86d	0.00	0.00	0.00	NC	NC

Member 2: (Top Slab), Thickness = 12.00 in

Loc	Dist. (in)	Design Shear (k)	Corr. Moment (k-ft)	Corr. A. F. (k)	Dv (in)	phi*Vn (k)	Beta	Theta	Vc (k)	Vs (k)	Av (in2)	Max. Spac (in)	Load Ratings IR	Load Ratings OR
LT	13.44	8.22	-6.4	2.87	9.63	22.05	n/a	n/a	24.50d	0.00	0.00	0.00	NC	NC
MID	66.06	1.54	25.7	0.77	10.63	24.34	n/a	n/a	27.05d	0.00	0.00	0.00	15.79	26.37
RT	13.44	8.22	-6.4	2.87	9.63	22.05	n/a	n/a	24.50d	0.00	0.00	0.00	NC	NC

Vc Calculation By: a - Iterative Beta, b - Constant Beta, c - Box Culvert, d - Standard/Arema

Load Combination Results at Tenth Points: (k-ft, k)(Fill Depth = 3.50 ft)

M-PT	+Moment	-Moment	+Axial	-Axial	+Shear	-Shear
Member 1: (Exterior Wall)						
Bottom						
1- 0	0.000	0.000	5.062	10.015	0.000	0.000
1- 1	-0.006	-0.088	5.062	10.015	-0.019	-0.548
1- 2	-0.027	-0.352	5.062	10.015	-0.052	-1.067
1- 3	-0.072	-0.790	5.062	10.015	-0.097	-1.558
1- 4	-0.147	-1.402	5.062	10.015	-0.154	-2.022
1- 5	-0.261	-2.188	5.062	10.015	-0.225	-2.457
1- 6	-0.420	-3.145	5.062	10.015	-0.308	-2.864
1- 7	-0.634	-4.275	5.062	10.015	-0.404	-3.243
1- 8	-0.908	-5.575	5.062	10.015	-0.512	-3.594
1- 9	-1.252	-7.046	5.062	10.015	-0.633	-3.917
1-10	-1.672	-8.685	5.062	10.015	-0.768	-4.212
Top						
Member 2: (Top Slab)						
Left						
2- 0	-1.666	-8.686	0.768	2.874	10.015	5.062
2- 1	8.205	-3.723	0.768	2.874	8.247	3.919
2- 2	15.855	0.112	0.768	2.874	6.566	2.738
2- 3	21.315	2.851	0.768	2.874	4.885	1.435
2- 4	24.600	4.494	0.768	2.874	3.203	0.008
2- 5	25.695	5.042	0.768	2.874	1.542	-1.542
2- 6	24.598	4.492	0.768	2.874	-0.008	-3.203
2- 7	21.314	2.849	0.768	2.874	-1.435	-4.885
2- 8	15.854	0.110	0.768	2.874	-2.738	-6.566
2- 9	8.203	-3.725	0.768	2.874	-3.919	-8.247
2-10	-1.668	-8.688	0.768	2.874	-5.062	-10.015
Right						

Analysis Results: Fill Depth = 4.00 ft

Load Parameters:

Fe = 1.07

Applied Horizontal Loads: (k/ft)

Load Description	Bottom of Wall	Top of Wall
Horizontal Earth Load	0.630	0.270
Live Load Surcharge	0.120	0.120
Internal Water Pressure	0.343	0.000

Unfactored Moments and Shears due to All Loads: (k-ft, k) (Fill Depth = 4.00 ft)

M-PT	Mdl	Msp	Mwp	Vdl	Vsp	Vwp
Member 1: (Exterior Wall)						
Bottom						
1- 0	0.00	0.00	0.00	0.00	0.00	0.00
1- 1	0.00	-0.13	0.06	0.00	-0.44	0.20
1- 2	0.00	-0.52	0.23	0.00	-0.86	0.37
1- 3	0.00	-1.15	0.50	0.00	-1.25	0.53
1- 4	0.00	-2.02	0.85	0.00	-1.63	0.66
1- 5	0.00	-3.10	1.28	0.00	-1.98	0.77
1- 6	0.00	-4.39	1.77	0.00	-2.31	0.86
1- 7	0.00	-5.87	2.31	0.00	-2.62	0.94
1- 8	0.00	-7.53	2.89	0.00	-2.91	0.99
1- 9	0.00	-9.35	3.49	0.00	-3.18	1.02
1-10	0.00	-11.33	4.11	0.00	-3.42	1.03
Top						
Member 2: (Top Slab)						
Left						
2- 0	0.00	-11.34	4.12	4.27	0.00	0.00
2- 1	4.19	-11.34	4.12	3.36	0.00	0.00
2- 2	7.42	-11.34	4.12	2.52	0.00	0.00
2- 3	9.74	-11.34	4.12	1.68	0.00	0.00
2- 4	11.12	-11.34	4.12	0.84	0.00	0.00
2- 5	11.59	-11.34	4.12	0.00	0.00	0.00
2- 6	11.12	-11.34	4.12	-0.84	0.00	0.00
2- 7	9.73	-11.34	4.12	-1.68	0.00	0.00
2- 8	7.42	-11.34	4.12	-2.52	0.00	0.00
2- 9	4.19	-11.34	4.12	-3.36	0.00	0.00
2-10	0.00	-11.34	4.12	-4.27	0.00	0.00
Right						

Live Load Parameters:

Traffic Direction is Parallel to Main Reinforcement
Distribution Width : 11.00 ft
Impact Factor : 1.00
Lane Load : 0.047 k/ft Distribution Width : 27.00 ft

Analysis Truck, HS-20

Vehicle	Axle No.	Weight (k/ft)	Length (ft)	Dist. From Previous (ft)
Truck	1	0.104	7.00	
	2	0.416	7.00	14.00
	3	0.416	7.00	14.00

Tandem	1	0.329	11.83

Pinned/Roller Reactions Applied to Structure: (service load values, k/unit width) (Fill Depth = 4.00 ft)

```
                 ___________
                |           |
                |           |
                |           |
                |           |
           ---->|           |<----
                A           A
                |           |
                |           |
```

	Vertical	Horizontal	Horizonal Movement of Left Node (in)
Dead Load	4.87	0.00	-0.020
Soil Pressure	0.00	0.00	-0.067
Water Pressure	0.00	0.00	-0.121
Live Load	1.98	0.00	-0.038
Without LL	4.87	0.00	0.103
With LL	6.85	0.00	0.065

Note: Reactions as shown - positive, movement to right - positive

Truck Positions That Cause Maximum Results:

Maximum +Moment in Top Slab

Vehicle	Axle No.	Weight (k)	Length (ft)	Dist. From Left End (ft)
Truck	1	0.104	7.00	19.51
	2	0.416	7.00	5.51
	3	0.416	7.00	-8.49

Maximum +Moment : 5.46 k-ft
Corresponding Moment at End : 0.00 k-ft

Maximum -Moment in Top Slab

Vehicle	Axle No.	Weight (k)	Length (ft)	Dist. From Left End (ft)
Truck	1	0.104	7.00	17.50
	2	0.416	7.00	3.50
	3	0.416	7.00	-10.50

Maximum -Moment : 1.98 k-ft
Corresponding Moment at Mid : -0.30 k-ft

Maximum +Shear in Top Slab

Truck	1	0.104	7.00	21.51
	2	0.416	7.00	7.51
	3	0.416	7.00	-6.49

Maximum +Shear : -1.98 k
Corresponding Shear at Mid : 0.30 k

Maximum -Shear in Top Slab

Truck	1	0.104	7.00	33.51
	2	0.416	7.00	19.51
	3	0.416	7.00	5.51

Maximum -Shear : 0.00 k
Corresponding Shear at Mid : 0.00 k

Maximum Deflection in Top Slab = 0.009 in
Truck 1 0.00 5.92

Maximum +Moment in Top Slab

Maximum +Moment : 83333.34 k-ft
Corresponding Moment at End : 0.00 k-ft

Maximum +Shear in Top Slab
Tandem 1 0.329 11.83 5.92
Maximum +Shear : -1.81 k
Corresponding Shear at Mid : 0.00 k

Maximum -Moment in Top Slab
Tandem 1 0.329 11.83 5.92
Maximum -Moment : 1.81 k-ft
Corresponding Moment at Mid : 0.00 k-ft

Maximum -Shear in Top Slab
Tandem 1 0.329 11.83 5.92
Maximum -Shear : 0.00 k
Corresponding Shear at Mid : 0.00 k

Unfactored Moments and Shears due to Truck Loads: (k-ft, k)

Truck Tandem Lane

M-PT	Mll+	Mll-	Vll+	Vll-	Mll+	Mll-	Vll+	Vll-	Mll+	Mll-	Vll+	Vll-
Member 1: (Exterior Wall)												
Bottom												
1- 0	0.00	0.00	0.00	0.00	0.00	0.00	0.00	0.00	0.00	0.00	0.00	0.00
1- 1	0.00	0.00	0.00	0.00	0.00	0.00	0.00	0.00	0.00	0.00	0.00	0.00
1- 2	0.00	0.00	0.00	0.00	0.00	0.00	0.00	0.00	0.00	0.00	0.00	0.00
1- 3	0.00	0.00	0.00	0.00	0.00	0.00	0.00	0.00	0.00	0.00	0.00	0.00
1- 4	0.00	0.00	0.00	0.00	0.00	0.00	0.00	0.00	0.00	0.00	0.00	0.00
1- 5	0.00	0.00	0.00	0.00	0.00	0.00	0.00	0.00	0.00	0.00	0.00	0.00
1- 6	0.00	0.00	0.00	0.00	0.00	0.00	0.00	0.00	0.00	0.00	0.00	0.00
1- 7	0.00	0.00	0.00	0.00	0.00	0.00	0.00	0.00	0.00	0.00	0.00	0.00
1- 8	0.00	0.00	0.00	0.00	0.00	0.00	0.00	0.00	0.00	0.00	0.00	0.00
1- 9	0.00	0.00	0.00	0.00	0.00	0.00	0.00	0.00	0.00	0.00	0.00	0.00
1-10	0.00	0.00	0.00	0.00	0.00	0.00	0.00	0.00	0.00	0.00	0.00	0.00
Top												
Member 2: (Top Slab)												
Left												
2- 0	0.00	0.00	1.98	0.00	0.00	0.00	1.81	0.00	0.00	0.00	0.26	0.00
2- 1	1.97	0.00	1.69	-0.02	1.79	0.00	1.47	-0.02	0.26	0.00	0.21	0.00
2- 2	3.49	0.00	1.40	-0.09	3.19	0.00	1.16	-0.07	0.46	0.00	0.17	-0.01
2- 3	4.59	0.00	1.11	-0.21	4.19	0.00	0.89	-0.16	0.60	0.00	0.13	-0.02
2- 4	5.24	0.00	0.82	-0.37	4.78	0.00	0.65	-0.29	0.69	0.00	0.09	-0.04
2- 5	5.46	0.00	0.57	-0.57	4.98	0.00	0.45	-0.45	0.72	0.00	0.07	-0.07
2- 6	5.24	0.00	0.37	-0.82	4.78	0.00	0.29	-0.65	0.69	0.00	0.04	-0.09
2- 7	4.59	0.00	0.21	-1.11	4.19	0.00	0.16	-0.89	0.60	0.00	0.02	-0.13
2- 8	3.49	0.00	0.09	-1.40	3.19	0.00	0.07	-1.16	0.46	0.00	0.01	-0.17
2- 9	1.97	0.00	0.02	-1.69	1.79	0.00	0.02	-1.47	0.26	0.00	0.00	-0.21
2-10	0.00	0.00	0.00	-1.98	0.00	0.00	0.00	-1.81	0.00	0.00	0.00	-0.26
Right												

Serviceability Check: Crack Control

Bar Mark	Location	Moment (k-ft)	Fss (ksi)	Allow (ksi)
A1	Top Corner Bar	-5.4	10.27	32.89
A100	Top Slab (int)	15.5	24.81	32.89
A300	Top Slab (ext)	0.0	0.00	99.99
B1	Ext Wall (int)	-0.2	0.00	32.89
B2	Ext Wall (ext)	0.0	0.00	0.00

Serviceability Check: Live Load Deflection

Deflection Ratio of Top Slab = 1/12889 (Limit = 1/800)

Strength Limit State at Critical Sections: Flexure

Member 1: (Exterior Wall), Thickness = 8.00 in

Loc	Dist. (in)	Design Moment (k-ft)	Corr. A. F. (k)	Mu (k-ft)	ds (in)	Ma (k-ft)	phi	As (in2)	1.2Mcr (k-ft)	Load Ratings IR	Load Ratings OR
BOT	0.00	-0.46	5.55	0.00	6.63	1.12	0.95	0.00	6.79	NC	NC
MID	28.80	0.00	5.55	22.15	6.63	22.85	0.95	0.75	6.79	NC	NC
MID-	36.00	-2.36	9.85	22.37	6.69	23.62	0.95	0.75	6.79	NC	NC
TOP	10.00	-7.00	9.85	22.15	6.63	23.40	0.95	0.75	6.79	NC	NC

Member 2: (Top Slab), Thickness = 12.00 in

Loc	Dist. (in)	Design Moment (k-ft)	Corr. A. F. (k)	Mu (k-ft)	ds (in)	Ma (k-ft)	phi	As (in2)	1.2Mcr (k-ft)	Load Ratings IR	Load Ratings OR
LT	6.00	-6.92	3.11	32.90	9.63	33.68	0.95	0.75	15.27	NC	NC
MID	66.06	24.90	0.88	36.48	10.63	36.68	0.95	0.75	15.27	1.99	3.33
RT	6.00	-6.92	3.11	32.90	9.63	33.68	0.95	0.75	15.27	NC	NC

Note: Mu - Resisting moment under pure flexure, Ma - Allowable moment under applied axial load

Strength Limit State at Critical Sections: Vertical Shear

Member 1: (Exterior Wall), Thickness = 8.00 in

Loc	Dist. (in)	Design Shear (k)	Corr. Moment (k-ft)	Corr. A. F. (k)	Dv (in)	phi*Vn (k)	Beta	Theta	Vc (k)	Vs (k)	Av (in2)	Max. Spac (in)	Load Ratings IR	Load Ratings OR
BOT	0.00	0.00	-0.5	5.55	6.63	15.18	n/a	n/a	16.86d	0.00	0.00	0.00	NC	NC
MID	36.00	0.28	0.0	5.55	6.63	15.18	n/a	n/a	16.86d	0.00	0.00	0.00	NC	NC
MID-	36.00	0.28	-2.4	9.85	6.69	15.32	n/a	n/a	17.02d	0.00	0.00	0.00	NC	NC
TOP	12.44	-3.88	-7.0	9.85	6.63	15.18	n/a	n/a	16.86d	0.00	0.00	0.00	NC	NC

Member 2: (Top Slab), Thickness = 12.00 in

Loc	Dist. (in)	Design Shear (k)	Corr. Moment (k-ft)	Corr. A. F. (k)	Dv (in)	phi*Vn (k)	Beta	Theta	Vc (k)	Vs (k)	Av (in2)	Max. Spac (in)	Load Ratings IR	Load Ratings OR
LT	13.44	8.01	-6.9	3.11	9.63	22.05	n/a	n/a	24.50d	0.00	0.00	0.00	NC	NC
MID	66.06	1.24	24.9	0.88	10.63	24.34	n/a	n/a	27.05d	0.00	0.00	0.00	19.60	32.74
RT	13.44	8.01	-6.9	3.11	9.63	22.05	n/a	n/a	24.50d	0.00	0.00	0.00	NC	NC

Vc Calculation By: a - Iterative Beta, b - Constant Beta, c - Box Culvert, d - Standard/Arema

Load Combination Results at Tenth Points: (k-ft, k)(Fill Depth = 4.00 ft)

M-PT	+Moment	-Moment	+Axial	-Axial	+Shear	-Shear
Member 1: (Exterior Wall)						
Bottom						
1- 0	0.000	0.000	5.546	9.855	0.000	0.000
1- 1	-0.009	-0.095	5.546	9.855	-0.031	-0.571
1- 2	-0.041	-0.380	5.546	9.855	-0.075	-1.114
1- 3	-0.103	-0.853	5.546	9.855	-0.132	-1.629
1- 4	-0.203	-1.514	5.546	9.855	-0.201	-2.115
1- 5	-0.348	-2.363	5.546	9.855	-0.283	-2.574
1- 6	-0.547	-3.398	5.546	9.855	-0.378	-3.005
1- 7	-0.806	-4.619	5.546	9.855	-0.486	-3.407
1- 8	-1.133	-6.025	5.546	9.855	-0.606	-3.781
1- 9	-1.536	-7.614	5.546	9.855	-0.739	-4.128
1-10	-2.023	-9.387	5.546	9.855	-0.885	-4.446
Top						
Member 2: (Top Slab)						
Left						
2- 0	-2.017	-9.388	0.885	3.108	9.855	5.546
2- 1	7.694	-3.945	0.885	3.108	8.044	4.318
2- 2	15.220	0.263	0.885	3.108	6.321	3.077
2- 3	20.600	3.269	0.885	3.108	4.597	1.737
2- 4	23.826	5.072	0.885	3.108	2.880	0.297
2- 5	24.903	5.674	0.885	3.108	1.242	-1.242
2- 6	23.825	5.071	0.885	3.108	-0.297	-2.880
2- 7	20.598	3.267	0.885	3.108	-1.737	-4.597
2- 8	15.218	0.262	0.885	3.108	-3.077	-6.321
2- 9	7.693	-3.946	0.885	3.108	-4.318	-8.044
2-10	-2.019	-9.390	0.885	3.108	-5.546	-9.855
Right						

Analysis Results: Fill Depth = 4.50 ft

Load Parameters:

Fe = 1.08

Applied Horizontal Loads: (k/ft)

Load Description	Bottom of Wall	Top of Wall
Horizontal Earth Load	0.660	0.300
Live Load Surcharge	0.120	0.120
Internal Water Pressure	0.343	0.000

Unfactored Moments and Shears due to All Loads: (k-ft, k) (Fill Depth = 4.50 ft)

M-PT	Mdl	Msp	Mwp	Vdl	Vsp	Vwp
Member 1: (Exterior Wall)						
Bottom						
1- 0	0.00	0.00	0.00	0.00	0.00	0.00
1- 1	0.00	-0.14	0.06	0.00	-0.46	0.20
1- 2	0.00	-0.54	0.23	0.00	-0.89	0.37
1- 3	0.00	-1.20	0.50	0.00	-1.31	0.53
1- 4	0.00	-2.10	0.85	0.00	-1.70	0.66
1- 5	0.00	-3.23	1.28	0.00	-2.07	0.77
1- 6	0.00	-4.58	1.77	0.00	-2.42	0.86
1- 7	0.00	-6.13	2.31	0.00	-2.75	0.94
1- 8	0.00	-7.87	2.89	0.00	-3.05	0.99
1- 9	0.00	-9.79	3.49	0.00	-3.34	1.02
1-10	0.00	-11.87	4.11	0.00	-3.60	1.03
Top						
Member 2: (Top Slab)						
Left						
2- 0	0.00	-11.88	4.12	4.64	0.00	0.00
2- 1	4.56	-11.88	4.12	3.66	0.00	0.00
2- 2	8.09	-11.88	4.12	2.75	0.00	0.00
2- 3	10.61	-11.88	4.12	1.83	0.00	0.00
2- 4	12.12	-11.88	4.12	0.92	0.00	0.00
2- 5	12.63	-11.88	4.12	0.00	0.00	0.00
2- 6	12.12	-11.88	4.12	-0.92	0.00	0.00
2- 7	10.61	-11.88	4.12	-1.83	0.00	0.00
2- 8	8.09	-11.88	4.12	-2.75	0.00	0.00
2- 9	4.56	-11.88	4.12	-3.66	0.00	0.00
2-10	0.00	-11.88	4.12	-4.64	0.00	0.00
Right						

Live Load Parameters:

Traffic Direction is Parallel to Main Reinforcement
Distribution Width : 11.88 ft
Impact Factor : 1.00
Lane Load : 0.046 k/ft Distribution Width : 27.88 ft

Analysis Truck, HS-20

Vehicle	Axle No.	Weight (k/ft)	Length (ft)	Dist. From Previous (ft)
Truck	1	0.086	7.88	
	2	0.342	7.88	14.00
	3	0.342	7.88	14.00

Tandem	1	0.296	12.71

Pinned/Roller Reactions Applied to Structure: (service load values, k/unit width) (Fill Depth = 4.50 ft)

```
                 ____________
                |            |
                |            |
                |            |
                |            |
           ---->|            |<----
                A            A
                |            |
                |            |
```

	Vertical	Horizontal	Horizonal Movement of Left Node (in)
Dead Load	5.24	0.00	-0.020
Soil Pressure	0.00	0.00	-0.075
Water Pressure	0.00	0.00	-0.121
Live Load	1.73	0.00	-0.036
Without LL	5.24	0.00	0.109
With LL	6.98	0.00	0.073

Note: Reactions as shown - positive, movement to right - positive

Truck Positions That Cause Maximum Results:

Maximum +Moment in Top Slab

Vehicle	Axle No.	Weight (k)	Length (ft)	Dist. From Left End (ft)
Truck	1	0.086	7.88	19.51
	2	0.342	7.88	5.51
	3	0.342	7.88	-8.49

Maximum +Moment : 4.76 k-ft
Corresponding Moment at End : 0.00 k-ft

Maximum +Shear in Top Slab

Truck	1	0.086	7.88	21.07
	2	0.342	7.88	7.07
	3	0.342	7.88	-6.93

Maximum +Shear : -1.73 k
Corresponding Shear at Mid : 0.15 k

Maximum Deflection in Top Slab = 0.009 in
Truck 1 0.00 6.35

Maximum +Moment in Top Slab

Maximum +Moment : 83333.34 k-ft
Corresponding Moment at End : 0.00 k-ft

Maximum +Shear in Top Slab

Tandem	1	0.296	12.71	6.35

Maximum +Shear : -1.63 k
Corresponding Shear at Mid : 0.00 k

Maximum -Moment in Top Slab

Vehicle	Axle No.	Weight (k)	Length (ft)	Dist. From Left End (ft)
Truck	1	0.086	7.88	17.94
	2	0.342	7.88	3.94
	3	0.342	7.88	-10.06

Maximum -Moment : 1.73 k-ft
Corresponding Moment at Mid : -0.15 k-ft

Maximum -Shear in Top Slab

Truck	1	0.086	7.88	19.51
	2	0.342	7.88	5.51
	3	0.342	7.88	-8.49

Maximum -Shear : 0.00 k
Corresponding Shear at Mid : 0.00 k

Maximum -Moment in Top Slab

Tandem	1	0.296	12.71	6.35

Maximum -Moment : 1.63 k-ft
Corresponding Moment at Mid : 0.00 k-ft

Maximum -Shear in Top Slab

Tandem	1	0.296	12.71	6.35

Maximum -Shear : 0.00 k
Corresponding Shear at Mid : 0.00 k

Unfactored Moments and Shears due to Truck Loads: (k-ft, k)

Truck Tandem Lane

M-PT	Mll+	Mll-	Vll+	Vll-	Mll+	Mll-	Vll+	Vll-	Mll+	Mll-	Vll+	Vll-
Member 1: (Exterior Wall)												
Bottom												
1- 0	0.00	0.00	0.00	0.00	0.00	0.00	0.00	0.00	0.00	0.00	0.00	0.00
1- 1	0.00	0.00	0.00	0.00	0.00	0.00	0.00	0.00	0.00	0.00	0.00	0.00
1- 2	0.00	0.00	0.00	0.00	0.00	0.00	0.00	0.00	0.00	0.00	0.00	0.00
1- 3	0.00	0.00	0.00	0.00	0.00	0.00	0.00	0.00	0.00	0.00	0.00	0.00
1- 4	0.00	0.00	0.00	0.00	0.00	0.00	0.00	0.00	0.00	0.00	0.00	0.00
1- 5	0.00	0.00	0.00	0.00	0.00	0.00	0.00	0.00	0.00	0.00	0.00	0.00
1- 6	0.00	0.00	0.00	0.00	0.00	0.00	0.00	0.00	0.00	0.00	0.00	0.00
1- 7	0.00	0.00	0.00	0.00	0.00	0.00	0.00	0.00	0.00	0.00	0.00	0.00
1- 8	0.00	0.00	0.00	0.00	0.00	0.00	0.00	0.00	0.00	0.00	0.00	0.00
1- 9	0.00	0.00	0.00	0.00	0.00	0.00	0.00	0.00	0.00	0.00	0.00	0.00
1-10	0.00	0.00	0.00	0.00	0.00	0.00	0.00	0.00	0.00	0.00	0.00	0.00
Top												
Member 2: (Top Slab)												
Left												
2- 0	0.00	0.00	1.73	0.00	0.00	0.00	1.63	0.00	0.00	0.00	0.25	0.00
2- 1	1.71	0.00	1.46	-0.02	1.61	0.00	1.32	-0.02	0.25	0.00	0.20	0.00
2- 2	3.05	0.00	1.19	-0.08	2.87	0.00	1.04	-0.07	0.45	0.00	0.16	-0.01
2- 3	4.00	0.00	0.92	-0.17	3.76	0.00	0.80	-0.15	0.58	0.00	0.12	-0.02
2- 4	4.57	0.00	0.68	-0.30	4.30	0.00	0.59	-0.26	0.67	0.00	0.09	-0.04
2- 5	4.76	0.00	0.47	-0.47	4.48	0.00	0.41	-0.41	0.70	0.00	0.06	-0.06
2- 6	4.57	0.00	0.30	-0.68	4.30	0.00	0.26	-0.59	0.67	0.00	0.04	-0.09
2- 7	4.00	0.00	0.17	-0.92	3.76	0.00	0.15	-0.80	0.58	0.00	0.02	-0.12
2- 8	3.05	0.00	0.08	-1.19	2.87	0.00	0.07	-1.04	0.45	0.00	0.01	-0.16
2- 9	1.71	0.00	0.02	-1.46	1.61	0.00	0.02	-1.32	0.25	0.00	0.00	-0.20
2-10	0.00	0.00	0.00	-1.73	0.00	0.00	0.00	-1.63	0.00	0.00	0.00	-0.25
Right												

Serviceability Check: Crack Control

Bar Mark	Location	Moment (k-ft)	Fss (ksi)	Allow (ksi)
A1	Top Corner Bar	-5.8	11.25	32.89
A100	Top Slab (int)	15.6	24.87	32.89
A300	Top Slab (ext)	0.0	0.00	99.99
B1	Ext Wall (int)	-0.2	0.00	32.89
B2	Ext Wall (ext)	0.0	0.00	0.00

Serviceability Check: Live Load Deflection

Deflection Ratio of Top Slab = 1/12889 (Limit = 1/800)

Strength Limit State at Critical Sections: Flexure

Member 1: (Exterior Wall), Thickness = 8.00 in

Loc	Dist. (in)	Design Moment (k-ft)	Corr. A. F. (k)	Mu (k-ft)	ds (in)	Ma (k-ft)	phi	As (in2)	1.2Mcr (k-ft)	Load Ratings IR	OR
BOT	0.00	-0.50	6.04	0.00	6.63	1.22	0.95	0.00	6.79	NC	NC
MID	28.80	0.00	6.04	22.15	6.63	22.92	0.95	0.75	6.79	NC	NC
MID-	36.00	-2.54	9.80	22.37	6.69	23.61	0.95	0.75	6.79	NC	NC
TOP	10.00	-7.52	9.80	22.15	6.63	23.40	0.95	0.75	6.79	NC	NC

Member 2: (Top Slab), Thickness = 12.00 in

Loc	Dist. (in)	Design Moment (k-ft)	Corr. A. F. (k)	Mu (k-ft)	ds (in)	Ma (k-ft)	phi	As (in2)	1.2Mcr (k-ft)	Load Ratings IR	OR
LT	6.00	-7.40	3.34	32.90	9.63	33.74	0.95	0.75	15.27	NC	NC
MID	66.06	24.39	1.00	36.48	10.63	36.71	0.95	0.75	15.27	2.19	3.66
RT	6.00	-7.40	3.34	32.90	9.63	33.74	0.95	0.75	15.27	NC	NC

Note: Mu - Resisting moment under pure flexure, Ma - Allowable moment under applied axial load

Strength Limit State at Critical Sections: Vertical Shear

Member 1: (Exterior Wall), Thickness = 8.00 in

Loc	Dist. (in)	Design Shear (k)	Corr. Moment (k-ft)	Corr. A. F. (k)	Dv (in)	phi*Vn (k)	Beta	Theta	Vc (k)	Vs (k)	Av (in2)	Max. Spac (in)	Load Ratings IR	OR
BOT	0.00	0.00	-0.5	6.04	6.63	15.18	n/a	n/a	16.86d	0.00	0.00	0.00	NC	NC
MID	36.00	0.34	0.0	6.04	6.63	15.18	n/a	n/a	16.86d	0.00	0.00	0.00	NC	NC
MID-	36.00	0.34	-2.5	9.80	6.69	15.32	n/a	n/a	17.02d	0.00	0.00	0.00	NC	NC
TOP	12.44	-4.07	-7.5	9.80	6.63	15.18	n/a	n/a	16.86d	0.00	0.00	0.00	NC	NC

Member 2: (Top Slab), Thickness = 12.00 in

Loc	Dist. (in)	Design Shear (k)	Corr. Moment (k-ft)	Corr. A. F. (k)	Dv (in)	phi*Vn (k)	Beta	Theta	Vc (k)	Vs (k)	Av (in2)	Max. Spac (in)	Load Ratings IR	OR
LT	13.44	7.90	-7.4	3.34	9.63	22.05	n/a	n/a	24.50d	0.00	0.00	0.00	NC	NC
MID	66.06	1.02	24.4	1.00	10.63	24.34	n/a	n/a	27.05d	0.00	0.00	0.00	23.81	39.76
RT	13.44	7.90	-7.4	3.34	9.63	22.05	n/a	n/a	24.50d	0.00	0.00	0.00	NC	NC

Vc Calculation By: a - Iterative Beta, b - Constant Beta, c - Box Culvert, d - Standard/Arema

Load Combination Results at Tenth Points: (k-ft, k)(Fill Depth = 4.50 ft)

M-PT	+Moment	-Moment	+Axial	-Axial	+Shear	-Shear
Member 1: (Exterior Wall)						
Bottom						
1- 0	0.000	0.000	6.038	9.797	0.000	0.000
1- 1	-0.013	-0.102	6.038	9.797	-0.043	-0.594
1- 2	-0.055	-0.408	6.038	9.797	-0.098	-1.161
1- 3	-0.135	-0.916	6.038	9.797	-0.167	-1.699
1- 4	-0.259	-1.627	6.038	9.797	-0.248	-2.209
1- 5	-0.436	-2.539	6.038	9.797	-0.342	-2.691
1- 6	-0.673	-3.651	6.038	9.797	-0.448	-3.145
1- 7	-0.978	-4.963	6.038	9.797	-0.567	-3.571
1- 8	-1.358	-6.474	6.038	9.797	-0.699	-3.969
1- 9	-1.821	-8.183	6.038	9.797	-0.844	-4.338
1-10	-2.374	-10.089	6.038	9.797	-1.002	-4.680
Top						
Member 2: (Top Slab)						
Left						
2- 0	-2.368	-10.090	1.002	3.342	9.797	6.038
2- 1	7.285	-4.159	1.002	3.342	7.934	4.720
2- 2	14.768	0.428	1.002	3.342	6.159	3.407
2- 3	20.116	3.704	1.002	3.342	4.385	2.013
2- 4	23.315	5.670	1.002	3.342	2.663	0.536
2- 5	24.392	6.326	1.002	3.342	1.022	-1.022
2- 6	23.313	5.669	1.002	3.342	-0.536	-2.663
2- 7	20.114	3.703	1.002	3.342	-2.013	-4.385
2- 8	14.767	0.426	1.002	3.342	-3.407	-6.159
2- 9	7.283	-4.161	1.002	3.342	-4.720	-7.934
2-10	-2.370	-10.092	1.002	3.342	-6.038	-9.797
Right						

Analysis Results: Fill Depth = 5.00 ft

Load Parameters:

Fe = 1.09

Applied Horizontal Loads: (k/ft)

Load Description	Bottom of Wall	Top of Wall
Horizontal Earth Load	0.690	0.330
Live Load Surcharge	0.120	0.120
Internal Water Pressure	0.343	0.000

Unfactored Moments and Shears due to All Loads: (k-ft, k) (Fill Depth = 5.00 ft)

M-PT	Mdl	Msp	Mwp	Vdl	Vsp	Vwp
Member 1: (Exterior Wall)						
Bottom						
1- 0	0.00	0.00	0.00	0.00	0.00	0.00
1- 1	0.00	-0.14	0.06	0.00	-0.48	0.20
1- 2	0.00	-0.56	0.23	0.00	-0.93	0.37
1- 3	0.00	-1.25	0.50	0.00	-1.36	0.53
1- 4	0.00	-2.19	0.85	0.00	-1.77	0.66
1- 5	0.00	-3.37	1.28	0.00	-2.16	0.77
1- 6	0.00	-4.78	1.77	0.00	-2.53	0.86
1- 7	0.00	-6.40	2.31	0.00	-2.87	0.94
1- 8	0.00	-8.22	2.89	0.00	-3.20	0.99
1- 9	0.00	-10.23	3.49	0.00	-3.50	1.02
1-10	0.00	-12.41	4.11	0.00	-3.78	1.03
Top						
Member 2: (Top Slab)						
Left						
2- 0	0.00	-12.42	4.12	5.03	0.00	0.00
2- 1	4.94	-12.42	4.12	3.97	0.00	0.00
2- 2	8.77	-12.42	4.12	2.98	0.00	0.00
2- 3	11.50	-12.42	4.12	1.98	0.00	0.00
2- 4	13.14	-12.42	4.12	0.99	0.00	0.00
2- 5	13.68	-12.42	4.12	0.00	0.00	0.00
2- 6	13.14	-12.42	4.12	-0.99	0.00	0.00
2- 7	11.50	-12.42	4.12	-1.98	0.00	0.00
2- 8	8.77	-12.42	4.12	-2.98	0.00	0.00
2- 9	4.94	-12.42	4.12	-3.97	0.00	0.00
2-10	0.00	-12.42	4.12	-5.03	0.00	0.00
Right						

Live Load Parameters:

Traffic Direction is Parallel to Main Reinforcement
Distribution Width : 24.75 ft
Impact Factor : 1.00
Lane Load : 0.045 k/ft Distribution Width : 38.75 ft

Analysis Truck, HS-20

Vehicle	Axle No.	Weight (k/ft)	Length (ft)	Dist. From Previous (ft)
Truck	1	0.074	8.75	
	2	0.296	8.75	14.00
	3	0.296	8.75	14.00

Tandem	1	0.268	13.58

Pinned/Roller Reactions Applied to Structure: (service load values, k/unit width) (Fill Depth = 5.00 ft)

```
                 ___________
                |           |
                |           |
                |           |
                |           |
           ---->|           |<----
                A           A
                |           |
                |           |
```

	Vertical	Horizontal	Horizonal Movement of Left Node (in)
Dead Load	5.63	0.00	-0.020
Soil Pressure	0.00	0.00	-0.084
Water Pressure	0.00	0.00	-0.121
Live Load	1.56	0.00	-0.034
Without LL	5.63	0.00	0.115
With LL	7.19	0.00	0.080

Note: Reactions as shown - positive, movement to right - positive

Truck Positions That Cause Maximum Results:

Maximum +Moment in Top Slab

Vehicle	Axle No.	Weight (k)	Length (ft)	Dist. From Left End (ft)
Truck	1	0.074	8.75	19.51
	2	0.296	8.75	5.51
	3	0.296	8.75	-8.49

Maximum +Moment : 4.29 k-ft
Corresponding Moment at End : 0.00 k-ft

Maximum -Moment in Top Slab

Vehicle	Axle No.	Weight (k)	Length (ft)	Dist. From Left End (ft)
Truck	1	0.074	8.75	18.38
	2	0.296	8.75	4.38
	3	0.296	8.75	-9.63

Maximum -Moment : 1.56 k-ft
Corresponding Moment at Mid : -0.07 k-ft

Maximum +Shear in Top Slab

Truck	1	0.074	8.75	20.64
	2	0.296	8.75	6.64
	3	0.296	8.75	-7.36

Maximum +Shear : -1.56 k
Corresponding Shear at Mid : 0.07 k

Maximum -Shear in Top Slab

Truck	1	0.074	8.75	33.51
	2	0.296	8.75	19.51
	3	0.296	8.75	5.51

Maximum -Shear : 0.00 k
Corresponding Shear at Mid : 0.00 k

Maximum Deflection in Top Slab = 0.009 in
Truck 1 0.00 6.79

Maximum +Moment in Top Slab

Maximum +Moment : 83333.34 k-ft
Corresponding Moment at End : 0.00 k-ft

Maximum -Moment in Top Slab
Tandem 1 0.268 13.58 6.79
Maximum -Moment : 1.47 k-ft
Corresponding Moment at Mid : 0.00 k-ft

Maximum +Shear in Top Slab
Tandem 1 0.268 13.58 6.79
Maximum +Shear : -1.47 k
Corresponding Shear at Mid : 0.00 k

Maximum -Shear in Top Slab
Tandem 1 0.268 13.58 6.79
Maximum -Shear : 0.00 k
Corresponding Shear at Mid : 0.00 k

Unfactored Moments and Shears due to Truck Loads: (k-ft, k)

Truck Tandem Lane

M-PT	Mll+	Mll-	Vll+	Vll-	Mll+	Mll-	Vll+	Vll-	Mll+	Mll-	Vll+	Vll-
Member 1: (Exterior Wall)												
Bottom												
1- 0	0.00	0.00	0.00	0.00	0.00	0.00	0.00	0.00	0.00	0.00	0.00	0.00
1- 1	0.00	0.00	0.00	0.00	0.00	0.00	0.00	0.00	0.00	0.00	0.00	0.00
1- 2	0.00	0.00	0.00	0.00	0.00	0.00	0.00	0.00	0.00	0.00	0.00	0.00
1- 3	0.00	0.00	0.00	0.00	0.00	0.00	0.00	0.00	0.00	0.00	0.00	0.00
1- 4	0.00	0.00	0.00	0.00	0.00	0.00	0.00	0.00	0.00	0.00	0.00	0.00
1- 5	0.00	0.00	0.00	0.00	0.00	0.00	0.00	0.00	0.00	0.00	0.00	0.00
1- 6	0.00	0.00	0.00	0.00	0.00	0.00	0.00	0.00	0.00	0.00	0.00	0.00
1- 7	0.00	0.00	0.00	0.00	0.00	0.00	0.00	0.00	0.00	0.00	0.00	0.00
1- 8	0.00	0.00	0.00	0.00	0.00	0.00	0.00	0.00	0.00	0.00	0.00	0.00
1- 9	0.00	0.00	0.00	0.00	0.00	0.00	0.00	0.00	0.00	0.00	0.00	0.00
1-10	0.00	0.00	0.00	0.00	0.00	0.00	0.00	0.00	0.00	0.00	0.00	0.00
Top												
Member 2: (Top Slab)												
Left												
2- 0	0.00	0.00	1.56	0.00	0.00	0.00	1.47	0.00	0.00	0.00	0.25	0.00
2- 1	1.54	0.00	1.30	-0.02	1.46	0.00	1.19	-0.01	0.24	0.00	0.20	0.00
2- 2	2.74	0.00	1.04	-0.07	2.59	0.00	0.94	-0.06	0.43	0.00	0.16	-0.01
2- 3	3.60	0.00	0.80	-0.15	3.41	0.00	0.72	-0.13	0.57	0.00	0.12	-0.02
2- 4	4.11	0.00	0.59	-0.26	3.89	0.00	0.53	-0.24	0.65	0.00	0.09	-0.04
2- 5	4.29	0.00	0.41	-0.41	4.05	0.00	0.37	-0.37	0.68	0.00	0.06	-0.06
2- 6	4.11	0.00	0.26	-0.59	3.89	0.00	0.24	-0.53	0.65	0.00	0.04	-0.09
2- 7	3.60	0.00	0.15	-0.80	3.41	0.00	0.13	-0.72	0.57	0.00	0.02	-0.12
2- 8	2.74	0.00	0.07	-1.04	2.59	0.00	0.06	-0.94	0.43	0.00	0.01	-0.16
2- 9	1.54	0.00	0.02	-1.30	1.46	0.00	0.01	-1.19	0.24	0.00	0.00	-0.20
2-10	0.00	0.00	0.00	-1.56	0.00	0.00	0.00	-1.47	0.00	0.00	0.00	-0.25
Right												

Serviceability Check: Crack Control

Bar Mark	Location	Moment (k-ft)	Fss (ksi)	Allow (ksi)
A1	Top Corner Bar	-6.2	12.17	32.89
A100	Top Slab (int)	15.9	25.32	32.89
A300	Top Slab (ext)	0.0	0.00	99.99
B1	Ext Wall (int)	-0.2	0.00	32.89
B2	Ext Wall (ext)	0.0	0.00	0.00

Serviceability Check: Live Load Deflection

Deflection Ratio of Top Slab = 1/12889 (Limit = 1/800)

Strength Limit State at Critical Sections: Flexure

Member 1: (Exterior Wall), Thickness = 8.00 in

Loc	Dist. (in)	Design Moment (k-ft)	Corr. A. F. (k)	Mu (k-ft)	ds (in)	Ma (k-ft)	phi	As (in2)	1.2Mcr (k-ft)	Load Ratings IR	Load Ratings OR
BOT	0.00	0.54	6.54	0.00	6.63	1.32	0.95	0.00	6.79	NC	NC
MID	28.80	0.00	6.54	22.15	6.63	22.98	0.95	0.75	6.79	NC	NC
MID-	36.00	-2.71	9.92	22.37	6.69	23.63	0.95	0.75	6.79	NC	NC
TOP	10.00	-8.04	9.92	22.15	6.63	23.41	0.95	0.75	6.79	NC	NC

Member 2: (Top Slab), Thickness = 12.00 in

Loc	Dist. (in)	Design Moment (k-ft)	Corr. A. F. (k)	Mu (k-ft)	ds (in)	Ma (k-ft)	phi	As (in2)	1.2Mcr (k-ft)	Load Ratings IR	Load Ratings OR
LT	6.00	-7.87	3.58	32.90	9.63	33.79	0.95	0.75	15.27	NC	NC
MID	66.06	24.38	1.12	36.48	10.63	36.74	0.95	0.75	15.27	2.33	3.89
RT	6.00	-7.88	3.58	32.90	9.63	33.79	0.95	0.75	15.27	NC	NC

Note: Mu - Resisting moment under pure flexure, Ma - Allowable moment under applied axial load

Strength Limit State at Critical Sections: Vertical Shear

Member 1: (Exterior Wall), Thickness = 8.00 in

Loc	Dist. (in)	Design Shear (k)	Corr. Moment (k-ft)	Corr. A. F. (k)	Dv (in)	phi*Vn (k)	Beta	Theta	Vc (k)	Vs (k)	Av (in2)	Max. Spac (in)	Load Ratings IR	Load Ratings OR
BOT	0.00	0.00	0.5	6.54	6.63	15.18	n/a	n/a	16.86d	0.00	0.00	0.00	NC	NC
MID	36.00	0.40	0.0	6.54	6.63	15.18	n/a	n/a	16.86d	0.00	0.00	0.00	NC	NC
MID-	36.00	0.40	-2.7	9.92	6.69	15.32	n/a	n/a	17.02d	0.00	0.00	0.00	NC	NC
TOP	12.44	-4.26	-8.0	9.92	6.63	15.18	n/a	n/a	16.86d	0.00	0.00	0.00	NC	NC

Member 2: (Top Slab), Thickness = 12.00 in

Loc	Dist. (in)	Design Shear (k)	Corr. Moment (k-ft)	Corr. A. F. (k)	Dv (in)	phi*Vn (k)	Beta	Theta	Vc (k)	Vs (k)	Av (in2)	Max. Spac (in)	Load Ratings IR	Load Ratings OR
LT	13.44	7.95	-7.9	3.58	9.63	22.05	n/a	n/a	24.50d	0.00	0.00	0.00	NC	NC
MID	66.06	0.88	24.4	1.12	10.63	24.34	n/a	n/a	27.05d	0.00	0.00	0.00	27.57	46.04
RT	13.44	7.95	-7.9	3.58	9.63	22.05	n/a	n/a	24.50d	0.00	0.00	0.00	NC	NC

Vc Calculation By: a - Iterative Beta, b - Constant Beta, c - Box Culvert, d - Standard/Arema

Load Combination Results at Tenth Points: (k-ft, k)(Fill Depth = 5.00 ft)

M-PT	+Moment	-Moment	+Axial	-Axial	+Shear	-Shear
Member 1: (Exterior Wall)						
Bottom						
1- 0	0.000	0.000	6.538	9.921	0.000	0.000
1- 1	-0.016	-0.109	6.538	9.921	-0.055	-0.618
1- 2	-0.069	-0.436	6.538	9.921	-0.122	-1.207
1- 3	-0.166	-0.979	6.538	9.921	-0.202	-1.769
1- 4	-0.315	-1.739	6.538	9.921	-0.295	-2.303
1- 5	-0.524	-2.714	6.538	9.921	-0.400	-2.808
1- 6	-0.799	-3.904	6.538	9.921	-0.518	-3.285
1- 7	-1.150	-5.307	6.538	9.921	-0.649	-3.735
1- 8	-1.582	-6.923	6.538	9.921	-0.793	-4.156
1- 9	-2.105	-8.752	6.538	9.921	-0.949	-4.549
1-10	-2.725	-10.791	6.538	9.921	-1.119	-4.914
Top						
Member 2: (Top Slab)						
Left						
2- 0	-2.719	-10.792	1.119	3.576	9.921	6.538
2- 1	7.050	-4.367	1.119	3.576	7.983	5.125
2- 2	14.635	0.605	1.119	3.576	6.131	3.729
2- 3	20.051	4.157	1.119	3.576	4.311	2.263
2- 4	23.289	6.288	1.119	3.576	2.562	0.725
2- 5	24.384	6.998	1.119	3.576	0.883	-0.883
2- 6	23.287	6.286	1.119	3.576	-0.725	-2.562
2- 7	20.049	4.155	1.119	3.576	-2.263	-4.311
2- 8	14.634	0.604	1.119	3.576	-3.729	-6.131
2- 9	7.048	-4.368	1.119	3.576	-5.125	-7.983
2-10	-2.721	-10.794	1.119	3.576	-6.538	-9.921
Right						

Design Footing

Loads:	Min cover	Max Cover
(unfactored) P_V =	7.72^k	7.19^k
P_D =	3.46^k	5.63^k
P_L =	4.31^k	1.56^k
factored	13.0^k	9.92^k

Width of section = 4.0' ∴

Max soil pressure = 7.72/4 = 1.93 ksf

Ultimate factored uniform pressure on footing

W_u = 13/4 = 3.25 ksf

M_u = 3.25 klf (1.67 ft)^2 /2 = 4.5 k'

V_u = 3.25 klf × 1.67' = 5.42 k

Min. Reinforcing where flexure is present

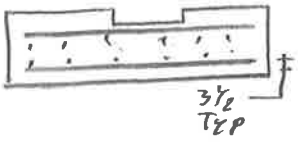

Section Grade Stiffs

$A_{s\,min}$ = 0.002 × 18 × 12 = 0.43 in^2/ft

Min Reinf for T&S

$A_{s\,min}$ = 0.002 × 18 × 12/2 faces = 0.22 in^2/ft

Use # 5@9" transverse & 4@10" long steel

f_y = 60 ksi f'_c = 5 ksi b = 12" d = 18 - 3½ - 5/16 = 14.19"

As = 0.46 in^2/ft a = 0.541

ϕM_N = 0.9 × 0.46 × 5 (14.19 - 0.541/2) = 28.8 k' } ok

ϕV_n = 0.75 × 2 $\sqrt{5{,}000}$ × 14.19 × 12 = 18.1^k }

THIS SHEET
INTENTIONALLY
LEFT BLANK

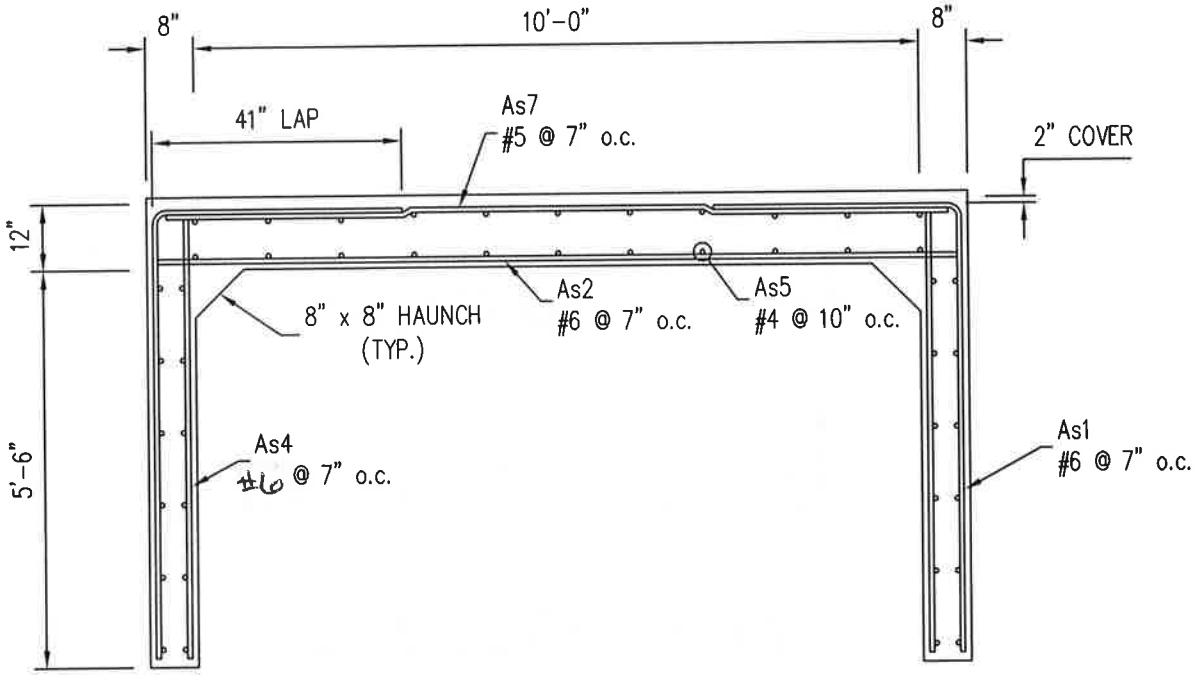

NOTE:
ALL CLEAR COVER ON REINFORCING IS 1" UNLESS OTHERWISE NOTED
ALL REINFORCING TO BE #4 @ 12" UNLESS OTHERWISE NOTED

SECTION VIEW

MATERIALS:	REINFORCING STEEL DRAWING	DESIGNED FOR:
CONCRETE f'c = 5,000 PSI STEEL REBAR fy = 60,000 PSI	RIGID FRAME 10'-0" SPAN x 5'-6" RISE	AASHTO HS-20 LIVE LOAD MINIMUM LAY LENGTH = 7.08' TOP OF TOP SLAB IS 2' TO 5' BELOW GRADE

THIS SHEET
INTENTIONALLY
LEFT BLANK

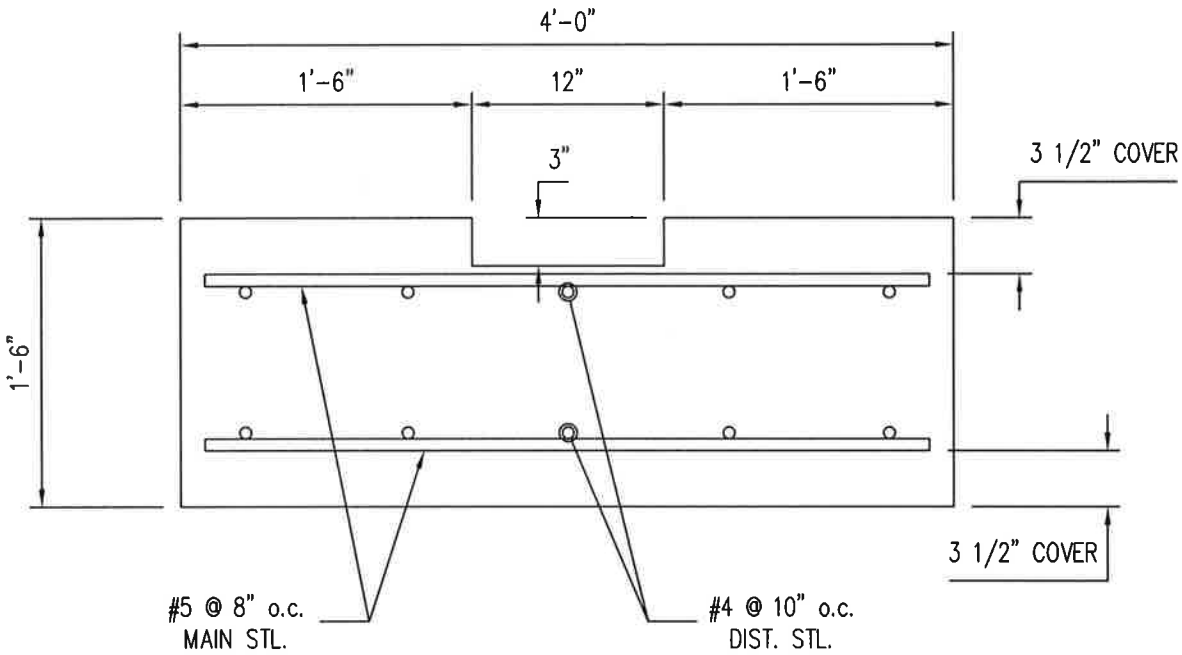

SECTION VIEW

MATERIALS:	REINFORCING STEEL DRAWING	DESIGNED FOR:
CONCRETE f'c = 5,000 PSI STEEL REBAR fy = 60,000 PSI	FOOTING FOR RIGID FRAME 10'-0" SPAN x 5'-6" RISE	AASHTO HS-20 LIVE LOAD AT SURFACE

GARY K. MUNKELT & ASSOC. Structural Engineers Fax: (215) 855-8714

THIS SHEET
INTENTIONALLY
LEFT BLANK