"LAKELAND FARMS"

TOWNHOUSE COMMUNITY SITE PLAN

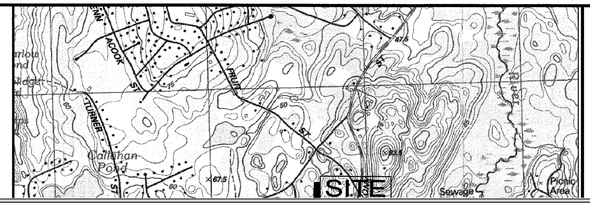

ASE

Andrews Survey & Engineering, Inc.
Land Surveying - Civil Engineering - Site Planning

P.O. Box 312, 104 Mendon Street
Uxbridge, Massachusetts 01569
P: 508-278-3897 F: 508-278-2289

500 East Washington Street
North Attleboro, Massachusetts 02760

GENERAL NOTES

PART 1 – TOPOGRAPHIC AND PROPERTY LINE INFORMATION

A. NOTICE TO CONTRACTOR: THE CONTRACTOR IS SPECIFICALLY CAUTIONED THAT THE LOCATION AND/OR ELEVATION OF EXISTING UTILITIES AND STRUCTURES AS SHOWN ON THESE PLANS IS BASED ON RECORDS OF VARIOUS UTILITY COMPANIES AND WHERE POSSIBLE, MEASUREMENTS TAKEN IN THE FIELD. THIS INFORMATION IS NOT TO BE RELIED ON AS BEING EXACT OR COMPLETE. THE LOCATION OF ALL UNDERGROUND UTILITIES AND STRUCTURES SHALL BE VERIFIED IN THE FIELD BY THE CONTRACTOR PRIOR TO THE START OF CONSTRUCTION. THE CONTRACTOR MUST CONTACT THE APPROPRIATE UTILITY COMPANY, ANY GOVERNING PERMITTING AUTHORITY, AND "DIGSAFE" AT LEAST 72 HOURS PRIOR TO ANY EXCAVATION WORK TO REQUEST EXACT FIELD LOCATION OF UTILITIES. THE ENGINEER SHALL BE NOTIFIED IN WRITING OF ANY UTILITIES INTERFERING WITH THE PROPOSED CONSTRUCTION AND APPROPRIATE REMEDIAL ACTION SHALL BE TAKEN BEFORE PROCEEDING WITH THE WORK. IT SHALL BE THE RESPONSIBILITY OF THE CONTRACTOR TO RELOCATE ALL EXISTING UTILITIES WHICH CONFLICT WITH THE PROPOSED IMPROVEMENTS SHOWN ON THE PLAN.

B. PROPERTY LINE AND TOPOGRAPHY:

- EXISTING PROPERTY LINE, UTILITY INFORMATION AND TOPOGRAPHIC INFORMATION PERFORMED BY ANDREWS SURVEY & ENGINEERING, INC.

C. WETLAND DELINEATION BY B&C ASSOCIATES, INC.

D. DATUM: ASSUMED

E. BENCHMARKS: ASSUMED (SEE EXISTING CONDITIONS PLAN)

F. COORDINATE SYSTEM: ASSUMED

G. CONSTRUCTION STAKING CONTROL: THE CONTRACTOR SHALL BE RESPONSIBLE FOR ESTABLISHING AND MAINTAINING ALL CONTROL POINTS AND BENCH MARKS NECESSARY TO PERFORM THE WORK.

H. FLOODPLAIN: THE PROPERTY DOES NOT LIE IN A FLOOD HAZARD AREA OR 100–YEAR FLOODPLAIN ACCORDING TO THE MOST RECENT FLOOD INSURANCE RATE MAPS FOR NORFOLK, MAP NUMBER 25021C0164E, EFFECTIVE DATE 7/17/12.

PART 2 – EXECUTION

2.1 DEMOLITION, SEDIMENTATION, AND EROSION CONTROL

A. THE FIRST STAGE INVOLVES ACTIVITIES NEEDED TO ADDRESS STORMWATER MANAGEMENT, EXCAVATING MATERIAL DESIGNATED FOR OFF–SITE REMOVAL OR ON–SITE RELOCATION AND FENCING SELECTED AREAS. STAGE ONE WILL PREPARE SITE FOR CONVENTIONAL CONSTRUCTION.

B. THE SECOND STAGE WILL CONSIST OF ROUTINE CONSTRUCTION INVOLVING BUILDING, PAVING, LANDSCAPING, AND UTILITIES.

C. THERE ARE GENERAL PHASES OF CONSTRUCTION. IN EACH PHASE OF CONSTRUCTION, IMPLEMENT STANDARD EROSION AND SEDIMENT CONTROL PRACTICES PRIOR TO INITIATING EARTH DISTURBING ACTIVITIES, AND MAINTAIN THESE PRACTICES THROUGHOUT THE COURSE OF CONSTRUCTION.

D. DURING DEMOLITION, EXCAVATIONS AS MUCH AS 20 FEET MAY BE REQUIRED FOR THE INSTALLATION OF FOUNDATIONS, RETAINING WALLS, AND UTILITIES. EXCAVATIONS SHALL BE CUT TO A STABLE SLOPE OR BE TEMPORARILY BRACED, DEPENDING ON THE EXCAVATION DEPTHS AND THE ENCOUNTERED SUBSURFACE CONDITIONS. THE CONTRACTOR MAY BE REQUIRED TO SUBMIT EXCAVATION AND SLOPE STABILIZATION METHODS PRIOR TO THE START OF CONSTRUCTION TO THE ENGINEER FOR REVIEW.

E. BASED ON THE COMPOSITION OF SOILS ENCOUNTERED DURING THE EXPLORATION PROGRAM, SITE SOILS ARE GENERALLY CLASSIFIED AS TYPES B AND C SOILS AS DEFINED BY (USGS) NATIONAL RESOURCES CONSERVATION SERVICE (NRCS), FORMERLY SOIL CONSERVATION SURVEY (SCS). TEMPORARY CONSTRUCTION SLOPES SHOULD BE DESIGNED IN STRICT COMPLIANCE WITH THE MOST RECENT GOVERNING REGULATIONS. STOCKPILES SHOULD BE PLACED WELL AWAY FROM THE EDGE OF THE EXCAVATION AND THEIR HEIGHT SHOULD BE CONTROLLED TO PREVENT SURCHARGE TO THE SIDES OF THE EXCAVATION. SURFACE DRAINAGE SHOULD BE CONTROLLED TO AVOID FLOW OF SURFACE WATER INTO THE EXCAVATIONS.

F. CONSTRUCTION SLOPES SHOULD BE REVIEWED FOR MASS MOVEMENT. IF POTENTIAL STABILITY PROBLEMS ARE OBSERVED, WORK SHOULD CEASE AND A GEOTECHNICAL ENGINEER SHOULD BE CONTACTED IMMEDIATELY. THE RESPONSIBILITY FOR EXCAVATION SAFETY AND STABILITY OF TEMPORARY CONSTRUCTION SLOPES SHOULD LIE SOLELY WITH THE CONTRACTOR.

2.2 – TYPICAL PRACTICES TO BE APPLIED TO THE SITE INCLUDE THE FOLLOWING:

A. PRIOR TO EARTH DISTURBANCE IN ANY WORK AREA, INSTALL EROSION CONTROL BARRIERS BETWEEN THE WORK AREA AND THE SURFACE WATER RESOURCE TO WHICH IT DRAINS.

B. DISCHARGE WATER FROM DEWATERING OPERATIONS TO A TEMPORARY SILTATION TRAP OR SEDIMENTATION BASIN.

C. PROVIDE TEMPORARY BERMS AND SWALES TO DIVERT SURFACE WATER AWAY FROM THE AREAS THAT WILL BE EXPOSED BY CONSTRUCTION ACTIVITY TO MINIMIZE THE AMOUNT OF SURFACE WATER COMING INTO CONTACT WITH EXPOSED SOILS. PROVIDE STABLE OUTLETS FOR THESE DEVICES, AND LINE OR VEGETATE THESE DIVERSIONS TO PROVIDE FOR THEIR STABILITY DURING CONSTRUCTION.

D. LIMIT THE EXTENT OF EXPOSED SOILS TO AREAS THAT CAN BE WORKED AND RESTABILIZED WITHIN THE CONSTRUCTION SEASON AND DURING THE SPECIFIC CONSTRUCTION PHASE.

E. WHEN EARTHWORK CONSTRUCTION ACTIVITY IN AN AREA IS COMPLETE, STABILIZE THE AREA WITH A SUITABLE SURFACE AS DESCRIBED BELOW.

F. IN ADDITION TO THESE PRACTICES, FOLLOW THE SPECIAL PRACTICES DESCRIBED BELOW. COMPLY WITH THE DIRECTIONS OF THE APPLICANT'S REPRESENTATIVE TO ADDRESS EROSION AND SEDIMENTATION CONDITIONS THAT MAY ARISE ON A CASE BY CASE BASIS DURING CONSTRUCTION.

G. THE FOLLOWING IS A DESCRIPTION OF MINIMUM CONSTRUCTION REQUIREMENTS AND DOES NOT RELIEVE THE CONTRACTOR OF HIS RESPONSIBILITIES WITH REGARD TO DETERMINING THE ADEQUACY OF MEANS AND METHODS OF CONSTRUCTION.

2.3 – CONSTRUCTION SEQUENCING

A. SEQUENCING SHALL BE AS SHOWN ON THE PLAN AND AS DICTATED BY THE REQUIREMENTS OF CONSTRUCTION.

2.4 – MAINTENANCE

A. DURING THE PERIOD OF CONSTRUCTION AND/OR UNTIL LONG TERM VEGETATION IS ESTABLISHED:

B. SEEDED AREAS WILL BE FERTILIZED AND RESEEDED AS NECESSARY TO INSURE VEGETATION ESTABLISHMENT.

C. TEMPORARY SEDIMENTATION BASINS WILL BE CHECKED AFTER EACH SIGNIFICANT RAINFALL AND CLEANED AS NEEDED TO RETAIN STORAGE CAPACITY.

D. TEMPORARY DRAINAGE SWALES WILL BE CHECKED WEEKLY AND REPAIRED WHEN NECESSARY.

E. THE EROSION CONTROL BARRIERS AND OTHER EROSION AND SEDIMENT CONTROL MEASURES/DEVICES SHALL BE INSPECTED, CLEANED, REPLACED AND/OR REPAIRED AS NECESSARY, PERIODICALLY AND AFTER EACH SIGNIFICANT RAINFALL.

F. SWEEP ON–SITE PAVED AREAS AND OFF–SITE STREETS AS NECESSARY TO PREVENT SILT AND DEBRIS ORIGINATING ON–SITE FROM ENTERING CLOSED DRAINAGE SYSTEMS AND/OR ENVIRONMENTALLY SENSITIVE AREAS. WHEN NECESSARY UTILIZE WATER SPRAYING, SURFACE ROUGHENING AND/OR APPLY POLYMERS, SPRAY–ON TACKIFIERS, CHLORIDES AND BARRIERS FOR DUST CONTROL.

2.5 – GENERAL

A. ALL EROSION AND SEDIMENTATION CONTROL MEASURES SHALL BE CONSTRUCTED IN ACCORDANCE WITH (USDA) NATURAL RESOURCES CONSERVATION SERVICE (NRCS, FORMERLY SCS) GUIDELINES AND ALL LOCAL, COUNTY AND MUNICIPAL REGULATIONS.

B. EROSION AND SEDIMENTATION CONTROL MEASURES SHALL BE IN PLACE PRIOR TO THE COMMENCEMENT OF ANY SITE WORK OR EARTHWORK OPERATIONS, SHALL BE MAINTAINED DURING CONSTRUCTION, AND SHALL REMAIN IN PLACE UNTIL ALL SITE WORK IS COMPLETE AND GROUNDCOVER IS ESTABLISHED.

C. ALL WORK SHALL BE IN ACCORDANCE WITH THE PERMITS AND APPROVALS ISSUED AND THE CONSTRUCTION SPECIFICATIONS. BLASTING IS PROHIBITED ON THE PROJECT SITE.

D. STOCKPILES SHALL BE SURROUNDED ON THEIR PERIMETERS WITH STAKED STRAW WATTLES AND/OR SILTATION FENCES TO PREVENT AND/OR CONTROL SILTATION AND EROSION.

PART 2 – CONTINUED

E. TOPS OF STOCKPILES SHALL BE COVERED IN SUCH A MANNER THAT STORMWATER DOES NOT INFILTRATE THE MATERIALS AND THEREBY RENDER THE SAME UNSUITABLE FOR FILL USE.

F. ALL DISTURBED OR EXPOSED AREAS SHALL BE PERMANENTLY STABILIZED WITHIN FIVE (5) BUSINESS DAYS OF COMPLETION OF CONSTRUCTION OF A GIVEN AREA. EXPOSED AREAS WHERE NO WORK HAS OCCURRED FOR FOURTEEN (14) DAYS SHALL BE TEMPORARILY STABILIZED WITH HYDROSEED OR OTHER APPROVED METHOD.

G. THE LOCATION OF TEMPORARY DRAINAGE SWALES AND SEDIMENTATION TRAPS ARE APPROXIMATE ONLY AND SHALL BE RELOCATED AS REQUIRED AS CONSTRUCTION PROGRESSES.

H. HAYBALE DIKES SHALL BE CONSTRUCTED AT ALL EXISTING & PROPOSED CATCH BASINS LOCATED IN FILL AREAS & SUBJECT TO STORMWATER RUN–OFF FROM PROPOSED FILL AREAS DURING CONSTRUCTION, OR AS DIRECTED BY THE OWNER'S REPRESENTATIVE. NO SEDIMENTS SHALL ENTER THE ON–SITE OR OFF–SITE DRAINAGE SYSTEMS AT ANY TIME.

I. CULVERT/PIPE INLETS AND OUTFALLS SHALL BE PROTECTED BY STRAW WATTLE FILTERS UNTIL DISTURBED AREAS ARE PERMANENTLY STABILIZED.

J. EROSION CONTROLS SHALL BE PERIODICALLY INSPECTED AND REPLACED AS REQUIRED.

K. ALL PROPOSED NON–RIPRAP SLOPES STEEPER THAN 3:1 SHALL BE STABILIZED WITH EXCELSIOR BLANKETS AND PROTECTED FROM EROSION.

L. THE CONTRACTOR SHALL KEEP ON SITE AT ALL TIMES ADDITIONAL STRAW WATTLES AND EXTRA SILTATION FENCING FOR INSTALLATION AT THE DIRECTION OF THE OWNER'S REPRESENTATIVE OR LOCAL OFFICIALS TO MITIGATE ANY EMERGENCY CONDITION.

M. DISPOSAL OF ALL DEMOLISHED MATERIALS IS THE RESPONSIBILITY OF THE CONTRACTOR AND MUST BE HAULED OFF–SITE IN ACCORDANCE WITH ALL FEDERAL, STATE, AND LOCAL MUNICIPAL REQUIREMENTS.

N. THE CONTRACTOR SHALL PROTECT AND/OR CAP OFF ALL EXISTING ON–SITE UTILITY SERVICES DESIGNATED AS SUCH ON THESE DRAWINGS.

O. THE LIMIT OF WORK LINE FOR THE AREA TO BE CLEARED AND GRUBBED SHALL BE THE SAME AS THE LIMIT OF WORK LINE NECESSARY FOR GRADING PURPOSES, (I.E., THE GRADING LIMITS AROUND THE PERIMETER OF THE PROJECT AREA).

P. THE AREA OR AREAS OF ENTRANCE AND EXIT TO AND FROM THE SITE SHALL BE MAINTAINED IN A CONDITION WHICH WILL PREVENT TRACKING OR FLOWING OF SEDIMENT ONTO PUBLIC RIGHTS–OF–WAY. ALL SEDIMENT SPILLED, DROPPED, WASHED OR TRACKED ONTO PUBLIC RIGHT–OF–WAY MUST BE REMOVED IMMEDIATELY.

Q. FOLLOWING THE ADDITION OF A BINDER COURSE, THE CONTRACTOR SHALL SWEEP ALL ON–SITE PAVEMENT, IF NECESSARY, UNTIL ALL SITE CONSTRUCTION IS COMPLETED.

R. THE MATERIALS AND METHODS USED IN THE CONSTRUCTION OF ROADWAYS SHALL CONFORM TO THE REQUIREMENTS OF "TOWN OF NORFOLK CONSTRUCTION STANDARDS AND SPECIFICATIONS". WHEN NO CITY SPECIFICATION IS PROVIDED THE MATERIALS AND METHODS USED IN THE CONSTRUCTION OF ROADWAYS SHALL CONFORM TO THE REQUIREMENTS OF "THE COMMONWEALTH OF MASSACHUSETTS, DEPARTMENT OF PUBLIC WORKS, STANDARDS & SPECIFICATIONS FOR HIGHWAYS & BRIDGES," LATEST EDITION.

PART 3 – STORM DRAINS

A. STORM DRAIN PIPING (INDICATED BY LETTER "D") SHALL BE CORRUGATED POLYETHYLENE PIPE (HDPE) AS INDICATED, PER AASHTO M294 AND M252 MANUFACTURED WITH HIGH DENSITY POLYETHYLENE PLASTIC. HDPE SHALL BE ADS N–12 PIPE AS MANUFACTURED BY ADVANCED DRAINAGE SYSTEMS, INC. OR HANCOR HI Q PIPE AS MANUFACTURED BY HANCOR, INC. OR APPROVED EQUAL.

B. STORM DRAIN MANHOLES (INDICATED BY LETTERS "DMH") SHALL BE PRECAST 4', 5' OR 6' DIAMETER CONCRETE PER ASTM C478 (AS CALLED FOR ON DRAWINGS OR FIELD CONDITIONS REQUIRE) WITH RUBBER GASKET JOINTS CONFORMING TO ASTM C443. PIPE TO MANHOLE CONNECTIONS SHALL BE MORTARED PIPE OPENINGS.

C. CATCH BASINS (INDICATED BY LETTERS "CB") SHALL BE PRECAST 5' DIAMETER CONCRETE PER ASTM C478, (ALTERNATE TOP SLAB WHERE NECESSARY) AND RUBBER GASKET JOINTS CONFORMING TO ASTM C443, WITH 4 FOOT SUMPS AND GAS TRAP OUTLET ELBOW. PIPE TO STRUCTURE CONNECTIONS SHALL BE MORTARED PIPE OPENINGS.

D. COORDINATES OF MANHOLES REFER TO CENTERS OF STRUCTURES AND CATCH BASINS REFER TO THE CENTER BACK OF THE FRAME AND GRATE.

E. FLARED END SECTIONS (FES) SHALL BE CORRUGATED POLYETHYLENE PIPE (HDPE) AS INDICATED, PER AASHTO M170 MANUFACTURED TO MEET ASTM C76.

F. FLARED END SECTIONS (FES) SHALL BE CORRUGATED POLYETHYLENE PIPE AS INDICATED, MANUFACTURED WITH HIGH DENSITY POLYETHYLENE PLASTIC. ADS N–12 OR APPROVED EQUAL.

PART 4 – UTILITIES

4.1 – WATER DISTRIBUTION AND FIRE PROTECTION

A. WATER MAINS 3" DIA. AND LARGER SHALL HAVE 5'–0" MINIMUM COVER AND SHALL BE CEMENT LINED DUCTILE IRON (CLDI), CLASS 52 MINIMUM, CONFORMING TO AMERICAN NATIONAL STANDARDS INSTITUTE (ANSI) A21.50, A21.4, A21.10 AND A21.51. JOINTS AT FITTINGS, VALVES AND HYDRANT LATERALS SHALL BE MECHANICAL JOINT PER ANSI A21.11, WITH GASKETS. JOINTS AT OTHER LOCATIONS SHALL BE PUSH–ON TYPE WITH GASKETS PER ANSI A21.11. ALL FITTINGS, VALVES, HYDRANTS AND CAPS SHALL BE CLASS 350 PROVIDED WITH THRUST RESTRAINTS (THRUST BLOCKS AND RETAINING RODS) IN CONFORMANCE WITH THE DETAILS.

B. GENERALLY, WATER MAIN FITTINGS IDENTIFIED ON THIS DRAWING ARE SHOWN FOR INSTALLATION LOCATION PURPOSES. THE CONTRACTOR IS ADVISED THAT NOT ALL FITTINGS AND SUPPLY LINES ARE NOTED, SHOWN, OR INDICATED.

C. ALL HYDRANTS SHALL BE INSTALLED WITH A 6" CLDI LATERAL AND SHALL BE INSTALLED WITH A 6" GATE VALVE, BOX, AND TEE FITTING. ALL HYDRANTS SHALL MEET AND BE INSTALLED IN ACCORDANCE WITH ALL LOCAL MUNICIPAL STANDARDS.

D. ALL WATER MAIN APPURTENANCES, MATERIALS, AND METHODS OF INSTALLATION SHALL MEET OR EXCEED ALL LOCAL MUNICIPAL REQUIREMENTS.

E. PRESSURE AND LEAKAGE TEST, DISINFECTION AND FLUSHING SHALL BE IN ACCORDANCE WITH ALL LOCAL MUNICIPAL STANDARDS AND REQUIREMENTS. CONTRACTOR SHALL BE RESPONSIBLE FOR ALL COSTS IN CONNECTIONS WITH UTILITY TESTS, FLUSHING, AND INSPECTIONS AS REQUIRED BY THE LOCAL MUNICIPALITY.

F. EXISTING SERVICES SHALL BE CUT AND A WATERTIGHT PLUG SHALL BE INSTALLED. EXISTING GATE VALVES TO BE ABANDONED SHALL BE PERMANENTLY CLOSED AND CAPPED, AND WATER SERVICES SHOULD BE SHUT OFF AT THE MAIN CORPORATION.

4.2 – UTILITY SEPARATION

A. A MINIMUM 10 FEET CLEAR HORIZONTAL DISTANCE SHALL BE MAINTAINED BETWEEN SANITARY SEWER MAINS AND WATER MAINS. WHENEVER CONDITIONS PREVENT A LATERAL SEPARATION OF 10 FEET, THE WATER MAIN SHALL BE LAID IN A SEPARATE TRENCH AND THE ELEVATION OF THE CROWN OF THE SEWER SHALL BE AT LEAST 18 INCHES BELOW THE INVERT OF THE WATER MAIN.

B. A MINIMUM OF 18" VERTICAL CLEARANCE SHALL BE MAINTAINED WHERE WATER MAINS CROSS STORM DRAIN LINES.

C. WHERE SANITARY SEWERS CROSS WATER MAINS, THE SEWER SHALL BE LAID AT SUCH AN ELEVATION THAT THE CROWN OF THE SEWER IS AT LEAST TWO FEET BELOW THE INVERT OF THE WATER MAIN. IF THE ELEVATION OF THE SEWER CANNOT BE VARIED TO MEET THIS REQUIREMENT, THE CONTRACTOR SHALL DO THE FOLLOWING:

THE WATER MAIN SHALL BE RELOCATED TO PROVIDE THIS SEPARATION OR CONSTRUCTED WITH MECHANICAL–JOINT PIPE FOR A DISTANCE OF TEN FEET ON EACH SIDE OF THE SEWER. ONE FULL LENGTH OF WATER MAIN SHALL BE CENTERED OVER THE SEWER SO THAT BOTH JOINTS WILL BE AS FAR FROM THE SEWER AS POSSIBLE. IN ADDITION, THE WATER MAIN SHALL BE ENCASED IN CONCRETE.

D. PRIMARY ELECTRICAL ENCASED CONDUIT MUST BE SEPARATED FROM GAS BY 3' MIN. AND FROM OTHER UTILITIES BY 2' MINIMUM.

E. TELEPHONE AND FIRE ALARM WHICH SHARE THE SAME TRENCH MUST HAVE A 1' VERTICAL SEPARATION.

F. GAS MAINS MUST BE SEPARATED FROM OTHER UTILITIES BY 2' MINIMUM.

PART 4 – CONTINUED

4.3 – ELECTRIC AND COMMUNICATIONS

A. INSTALLATION OF COMMUNICATIONS (TELEPHONE, CABLE AND FIRE ALARM) SYSTEMS SHALL BE COORDINATED AND SCHEDULED BY THE CONTRACTOR WITH THE APPROPRIATE UTILITY COMPANY SERVICING THE PROJECT SITE.

B. COORDINATES REFER TO THE CENTER OF STRUCTURES UNLESS OTHERWISE NOTED OR DETAILED. CONTRACTOR SHALL COORDINATE LIGHT BASE LOCATIONS WITH PROPOSED CURBING AND PARKING LOT STRIPING.

C. CONTRACTOR IS RESPONSIBLE FOR VERIFYING ELECTRICAL SERVICE PRIOR TO ORDERING ANY EQUIPMENT.

PART 5 – PAVEMENT AND CURBING

A. JOINTS BETWEEN NEW BITUMINOUS CONCRETE PAVEMENT AND SAWCUT EXISTING PAVEMENT SHALL BE SEALED WITH BITUMEN AND BACKSANDED.

B. CURBING SHALL BE INSTALLED AS FOLLOWS:

BITUMINOUS MODIFIED CAPE COD CURB ALONG ROADWAY.

C. DIMENSIONS REFER TO FACE OF CURB UNLESS NOTED OTHERWISE.

D. ALL LIMITS OF PAVING SHALL BE CURBED UNLESS NOTED OR DETAILED OTHERWISE.

PART 6 – TRAFFIC CONTROL

A. INCLUDING, BUT NOT LIMITED TO, ALL CROSSWALKS, STOP LINES AND LEGENDS.

- LEGENDS SHALL BE PREFORMED PERMANENT PLASTIC. PAVEMENT MARKINGS SHALL BE THERMO PLASTIC (ALKYD). THE MARKINGS, LEGENDS SHALL BE INSTALLED IN ACCORDANCE WITH THE THE RELEVANT PORTIONS OF MASSACHUSETTS HIGHWAY DEPARTMENT (MHD) STANDARD SPECIFICATIONS. THE CONTRACTOR'S ATTENTION ALSO IS DIRECTED TO THE STANDARD SPECIFICATIONS, FOR REQUIREMENTS REGARDING THE AMBIENT AIR TEMPERATURE AT THE TIME OF APPLICATION.

PART 7 – QUALITY ASSURANCE

A. COMPLY WITH GOVERNING CODES AND REGULATIONS. PROVIDE PRODUCTS FROM ACCEPTABLE MANUFACTURERS. USE EXPERIENCED INSTALLERS. DELIVER, HANDLE, AND STORE MATERIALS IN ACCORDANCE WITH MANUFACTURER'S INSTRUCTIONS.

B. CONFORM TO CONDITIONS OF APPROVAL ISSUED BY REGULATORY AGENCIES INCLUDING, BUT NOT NECESSARILY LIMITED TO, LOCAL PLANNING BOARD, CONSERVATION COMMISSION, CITY COUNCIL, BOARD OF HEALTH, PUBLIC WORKS / HIGHWAY DEPARTMENT, STATE ENVIRONMENTAL PROTECTION DEPARTMENT, AND U.S. GOVERNMENT, ENVIRONMENTAL PROTECTION AGENCY. WHERE CONDITIONS OF REGULATORY APPROVAL DIFFER FROM REQUIREMENTS CONTAINED HEREIN OR ON THE DRAWINGS, COMPLY WITH THE MORE STRINGENT REQUIREMENT.

PART 8 – INSPECTION AND MAINTENANCE

BITUMINOUS CONCRETE

A. INSPECT ALL CATCH BASINS (CB) AND MANHOLES AT LOCATIONS SHOWN ON SITE PLANS. LOOK FOR SETTLING OF PAVEMENT, REPAIR AS REQUIRED. LOOK AT LEVEL OF SAND, SILT IN SUMPS. HAVE SUMPS CLEANED IF OUTLET PIPE IS BLOCKED. VERIFY THAT ELBOW (OIL TRAP) ON PIPE OUTLET IS SECURELY IN PLACE. CLEAN ALL LEAVES, TRASH, AND PINE NEEDLES FROM CB GRATE.

B. LOOK FOR SIGNS OF CRACKING & POTHOLES, REPAIR AS REQUIRED.

C. LOOK FOR SIGNS OF EROSION AT EDGES OF ROADWAY. INSPECT FOR BROKEN CURB. SEVERE EROSION MAY BE CAUSED BY PIPE BLOCKAGE AND RESULTING OVERFLOWS OUT OF CATCH BASINS. REMOVE DRAIN MANHOLE COVERS AND CB GRATES IN AREA AND LOOK FOR BLOCKAGES WHERE SURFACE EROSION IS EVIDENT.

LAWNS

B. INSPECT AFTER EACH SIGNIFICANT RAINFALL (½" OR MORE) FOR FIRST 6 MONTHS AFTER CONSTRUCTION TO ENSURE SURFACE VEGETATION IS HEALTHY, DISCHARGE DEVICES ARE NOT BLOCKED AND BANKS ARE NOT ERODING. CHECK ALL COMPONENTS AFTER EACH MAJOR STORM (MORE THAN 2" RAINFALL IN 24 HOURS). CLEAN/REPAIR AS REQUIRED.

LANDSCAPING

A. INSPECT FOR DISEASED/DYING TREES, SHRUBS, GROUND COVER, & GRASS; REPLACE AS REQUIRED.

B. INSPECT MULCH BEDS. SUPPLEMENT AS REQUIRED TO PROVIDE THE SPECIFIED MINIMUM DEPTH (LOOSE MEASURE).

RIP RAP (STONE) SLOPE PROTECTION

A. INSPECT STONE SLOPE PROTECTION, CUT EMERGING YOUNG TREES GROWING IN STONES. INSPECT STONE AT PIPE OUTLETS. REMOVE DEBRIS. REPAIR AS REQUIRED.

9.0 MONITORING WELL

A. MONITORING WELL TO BE MINIMUM 2IN DIAMETER PERFORATED SCH–40 PVC PIPE.

B. PIPE SHALL BE WRAPPED IN FILTER FABRIC IF INSTALLED IN OPEN HOLE.

C. END OF PIPE TO BE HAVE SCREW CAP AND BE RAISED 1 FOOT ABOVE THE SURROUNDING GROUND.

LEGEND

STONE BOUND W/D.H.	S.B.
CATCH BASIN	
DOUBLE CATCH BASIN	
DRAIN MANHOLE	
OUTLET STRUCTURE	OS
SEWER MANHOLE	SMH
UTILITY POLE	UP
WETLAND FLAG	WF
PROPOSED WATER GATE VALVE	
EXISTING HYDRANT	
PROPOSED HYDRANT	
EXISTING WELL	
CURB	
DRAIN LINE	D
UTILITY LINE	UGU
SEWER LINE	S
WATER LINE	W
STONEWALL	
TREE LINE	

ABBREVIATIONS

APPROXIMATE	APPROX.
BOOK	BK.
CAPE COD BERM	CCB
CEMENT LINED DUCTILE IRON	CLDI
IRON PIPE	I.P.
DRILL HOLE	D.H.
FOUND	FND
ELEVATION	ELEV.
EXISTING	EXIST.
FLARED END SECTION	FES
HIGH DENSITY POLYETHYLENE PIPE	HDPE
INVERT	INV.
NOW OR FORMERLY	N/F
OUTLET STRUCTURE	OS
PLAN BOOK	P.B.
PAGE	P.G.
PLAN	PL.
RETAINING	RET.
TIMBER GUARDRAIL	TGR
TYPICAL	TYP.
TEMPORARY BENCHMARK	TBM
NOT TO SCALE	N.T.S.
UTILITY POLE	UP
WETLAND FLAG	WF

ASE
Andrews Survey & Engineering, Inc.
Land Surveying - Civil Engineering - Site Planning

P.O. Box 312, 104 Mendon Street
Uxbridge, Massachusetts 01569
P: 508-278-3897 F: 508-278-2289

500 East Washington Street
North Attleboro, Massachusetts 02760
P: 508-316-0452 F: 508-316-0963

PROJECT: LAKELAND FARMS TOWNHOUSE COMMUNITY 84 CLEVELAND STREET NORFOLK, MA 02056

APPLICANT: LAKELAND FARMS, LLC 84 CLEVELAND STREET NORFOLK, MA 02056

REVISIONS

NO.	DATE	DESCRIPTION

CAD FILE	.\dwg\2014–111_SP.dwg
DRAWN BY	SJO, TRB
CHECKED BY	PBH, BJA
DATE	APRIL 19, 2016
PROJECT NO.	2014–111

SHEET TITLE

LEGEND, ABBREVIATIONS & GENERAL NOTES

COMMONWEALTH OF MASSACHUSETTS PAUL B. HJITNAK CIVIL No. 45872 REGISTERED PROFESSIONAL ENGINEER 4-19-16

DRAWING NO.

C–1.0

PLAN NO. L–4819

2016 © COPYRIGHT ANDREWS SURVEY & ENGINEERING, INC.

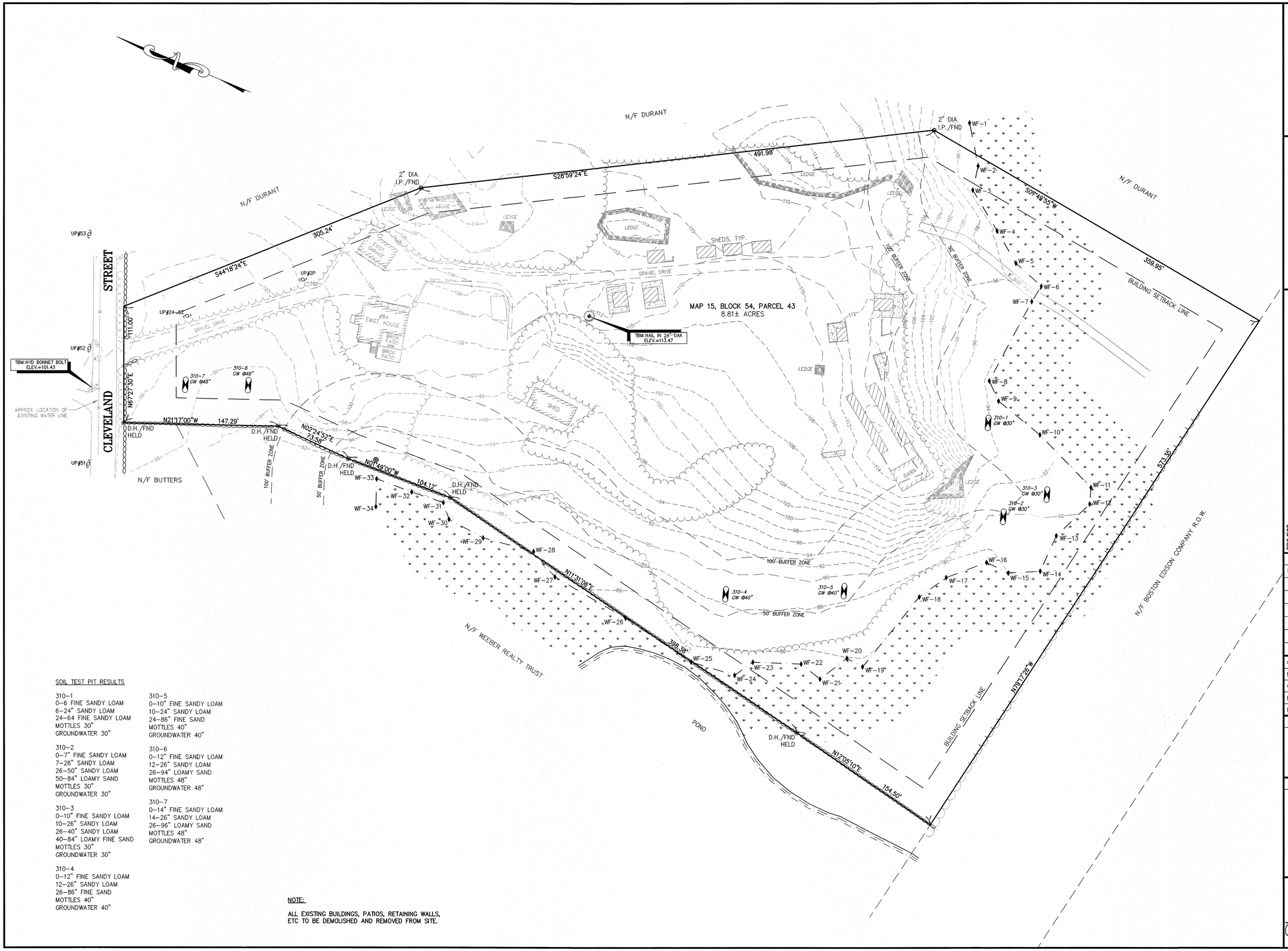

SOIL TEST PIT RESULTS

310-1
0-6 FINE SANDY LOAM
6-24" SANDY LOAM
24-64 FINE SANDY LOAM
MOTTLES 30"
GROUNDWATER 30"

310-2
0-7" FINE SANDY LOAM
7-26" SANDY LOAM
26-50" SANDY LOAM
50-84" LOAMY SAND
MOTTLES 30"
GROUNDWATER 30"

310-3
0-10" FINE SANDY LOAM
10-26" SANDY LOAM
26-40" SANDY LOAM
40-84" LOAMY FINE SAND
MOTTLES 30"
GROUNDWATER 30"

310-4
0-12" FINE SANDY LOAM
12-26" SANDY LOAM
26-86" FINE SAND
MOTTLES 40"
GROUNDWATER 40"

310-5
0-10" FINE SANDY LOAM
10-24" SANDY LOAM
24-86" FINE SAND
MOTTLES 40"
GROUNDWATER 40"

310-6
0-12" FINE SANDY LOAM
12-26" SANDY LOAM
26-94" LOAMY SAND
MOTTLES 48"
GROUNDWATER 48"

310-7
0-14" FINE SANDY LOAM
14-26" SANDY LOAM
26-96" LOAMY SAND
MOTTLES 48"
GROUNDWATER 48"

NOTE:

ALL EXISTING BUILDINGS, PATIOS, RETAINING WALLS, ETC TO BE DEMOLISHED AND REMOVED FROM SITE.

ASE

Andrews Survey & Engineering, Inc.
Land Surveying - Civil Engineering - Site Planning

P.O. Box 312, 104 Mendon Street
Uxbridge, Massachusetts 01569
P: 508-278-3897 F: 508-278-2289

500 East Washington Street
North Attleboro, Massachusetts 02760
P: 508-316-0452 F: 508-316-0963

PROJECT:
LAKELAND FARMS
TOWNHOUSE COMMUNITY
84 CLEVELAND STREET
NORFOLK, MA 02056

APPLICANT:
LAKELAND FARMS, LLC
84 CLEVELAND STREET
NORFOLK, MA 02056

REVISIONS

NO.	DATE	DESCRIPTION

CAD FILE	.\dwg\2014-111_SP.dwg
DRAWN BY	SJO, TRB
CHECKED BY	PBH, BJA
DATE	APRIL 19, 2016
PROJECT NO.	2014-111

GRAPHIC SCALE

40 0 20 40 80

(IN FEET)
1 inch = 40 feet

SHEET TITLE

EXISTING CONDITIONS PLAN

COMMONWEALTH OF MASSACHUSETTS
BYRON J. ANDREWS
No. 47389
PROFESSIONAL LAND SURVEYOR
4/19/16

DRAWING NO.

C-2.0

PLAN NO. L-4819

2016 © COPYRIGHT ANDREWS SURVEY & ENGINEERING, INC.

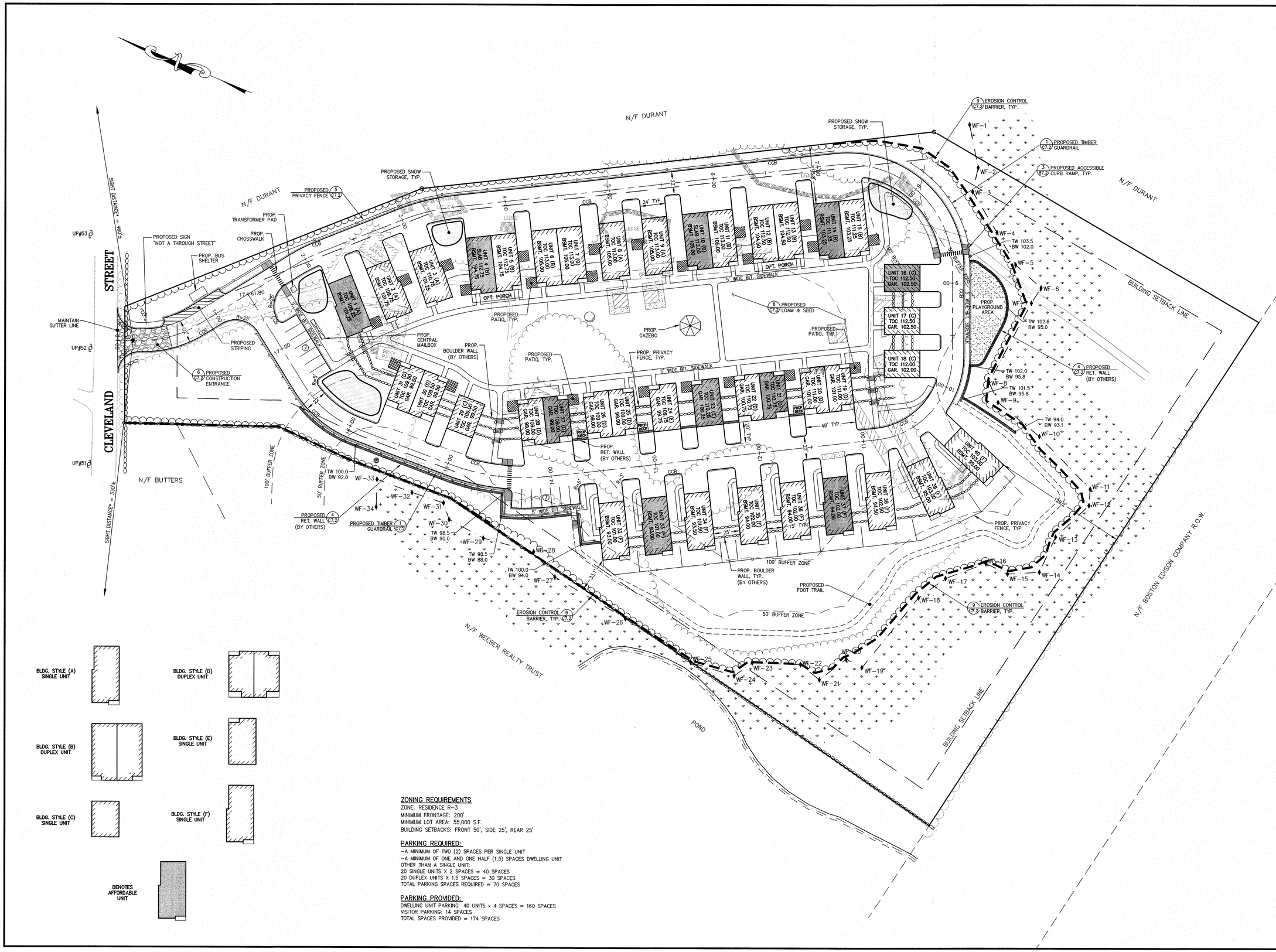

ZONING REQUIREMENTS

ZONE: RESIDENCE R-3
MINIMUM FRONTAGE: 200'
MINIMUM LOT AREA: 55,000 S.F.
BUILDING SETBACKS: FRONT 50', SIDE 25', REAR 25'

PARKING REQUIRED:

-A MINIMUM OF TWO (2) SPACES PER SINGLE UNIT
-A MINIMUM OF ONE AND ONE HALF (1.5) SPACES DWELLING UNIT OTHER THAN A SINGLE UNIT;
20 SINGLE UNITS X 2 SPACES = 40 SPACES
20 DUPLEX UNITS X 1.5 SPACES = 30 SPACES
TOTAL PARKING SPACES REQUIRED = 70 SPACES

PARKING PROVIDED:

DWELLING UNIT PARKING: 40 UNITS x 4 SPACES = 160 SPACES
VISITOR PARKING: 14 SPACES
TOTAL SPACES PROVIDED = 174 SPACES

ASE
Andrews Survey & Engineering, Inc.
Land Surveying - Civil Engineering - Site Planning
P.O. Box 312, 104 Mendon Street
Uxbridge, Massachusetts 01569
P: 508-278-3897 F: 508-278-2289
500 East Washington Street
North Attleboro, Massachusetts 02760
P: 508-316-0452 F: 508-316-0963

PROJECT: LAKELAND FARMS TOWNHOUSE COMMUNITY 84 CLEVELAND STREET NORFOLK, MA 02056

APPLICANT: LAKELAND FARMS, LLC 84 CLEVELAND STREET NORFOLK, MA 02056

REVISIONS

NO.	DATE	DESCRIPTION

CAD FILE	.\dwg\2014-111_SP.dwg
DRAWN BY	SJO, TRB
CHECKED BY	PBH, BJA
DATE	APRIL 19, 2016
PROJECT NO.	2014-111

GRAPHIC SCALE

40 0 20 40 80

(IN FEET)
1 inch = 40 feet

SHEET TITLE

LAYOUT & MATERIALS PLAN

COMMONWEALTH OF MASSACHUSETTS
PAUL B. KUTNAK
CIVIL
No. 45872
REGISTERED PROFESSIONAL ENGINEER
4-19-16

DRAWING NO.

C-3.0

PLAN NO. L-4819

2016 © COPYRIGHT ANDREWS SURVEY & ENGINEERING, INC.

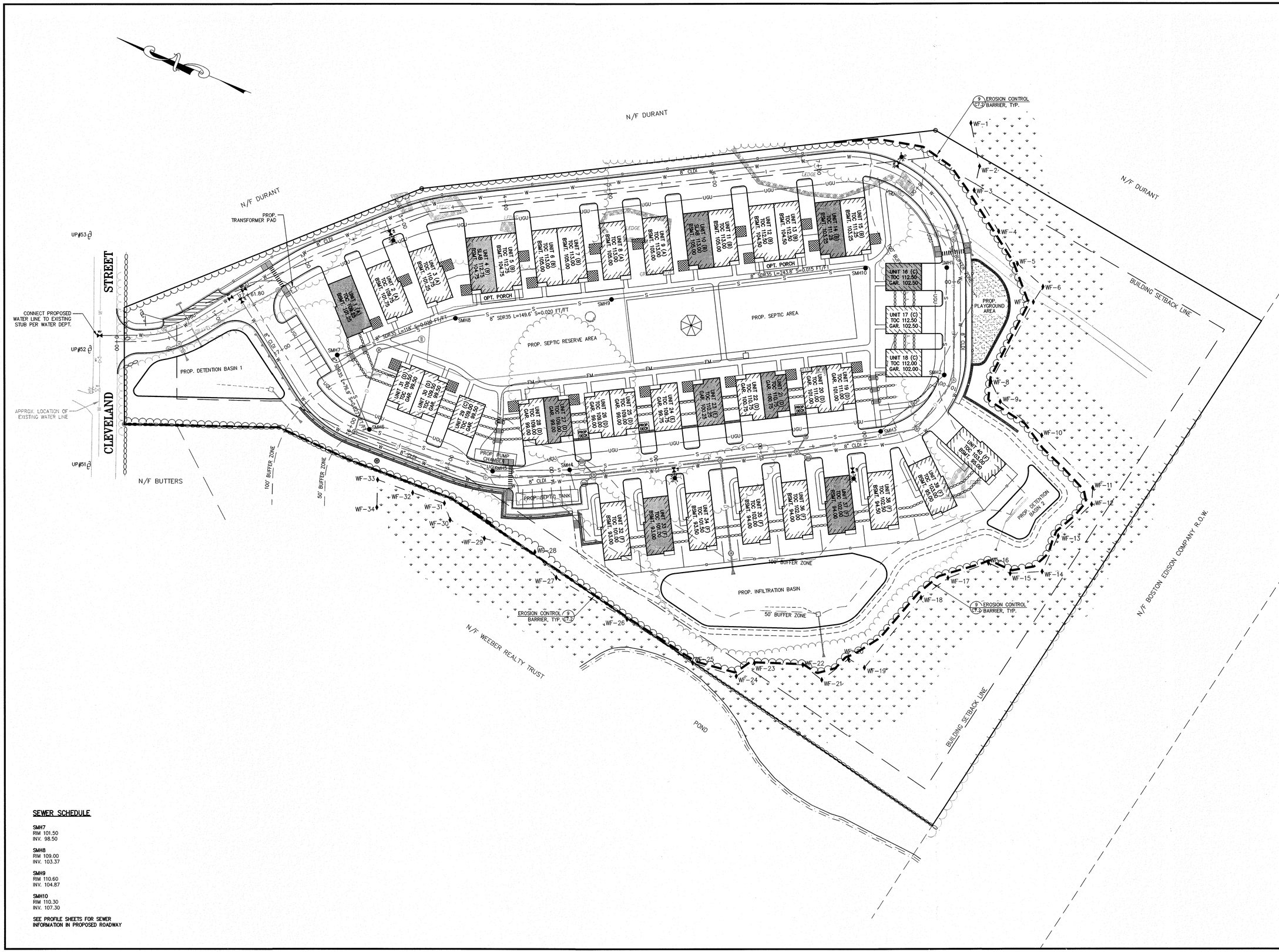

SEWER SCHEDULE

SMH7
RIM 101.50
INV. 98.50

SMH8
RIM 109.00
INV. 103.37

SMH9
RIM 110.60
INV. 104.87

SMH10
RIM 110.30
INV. 107.30

SEE PROFILE SHEETS FOR SEWER INFORMATION IN PROPOSED ROADWAY

ASE

Andrews Survey & Engineering, Inc.
Land Surveying - Civil Engineering - Site Planning

P.O. Box 312, 104 Mendon Street
Uxbridge, Massachusetts 01569
P: 508-278-3897 F: 508-278-2289

500 East Washington Street
North Attleboro, Massachusetts 02760
P: 508-316-0452 F: 508-316-0963

PROJECT:
LAKELAND FARMS
TOWNHOUSE COMMUNITY
84 CLEVELAND STREET
NORFOLK, MA 02056

APPLICANT:
LAKELAND FARMS, LLC
84 CLEVELAND STREET
NORFOLK, MA 02056

REVISIONS

NO.	DATE	DESCRIPTION

CAD FILE	.\dwg\2014-111_SP.dwg
DRAWN BY	SJO, TRB
CHECKED BY	PBH, BJA
DATE	APRIL 19, 2016
PROJECT NO.	2014-111

GRAPHIC SCALE

40 0 20 40 80

(IN FEET)
1 inch = 40 feet

SHEET TITLE

UTILITY PLAN

COMMONWEALTH OF MASSACHUSETTS
PAUL B. HUTNAK
CIVIL
No. 45872
REGISTERED PROFESSIONAL ENGINEER
4/19/16

DRAWING NO.

C-4.0

PLAN NO. L-4819

2016 © COPYRIGHT ANDREWS SURVEY & ENGINEERING, INC.

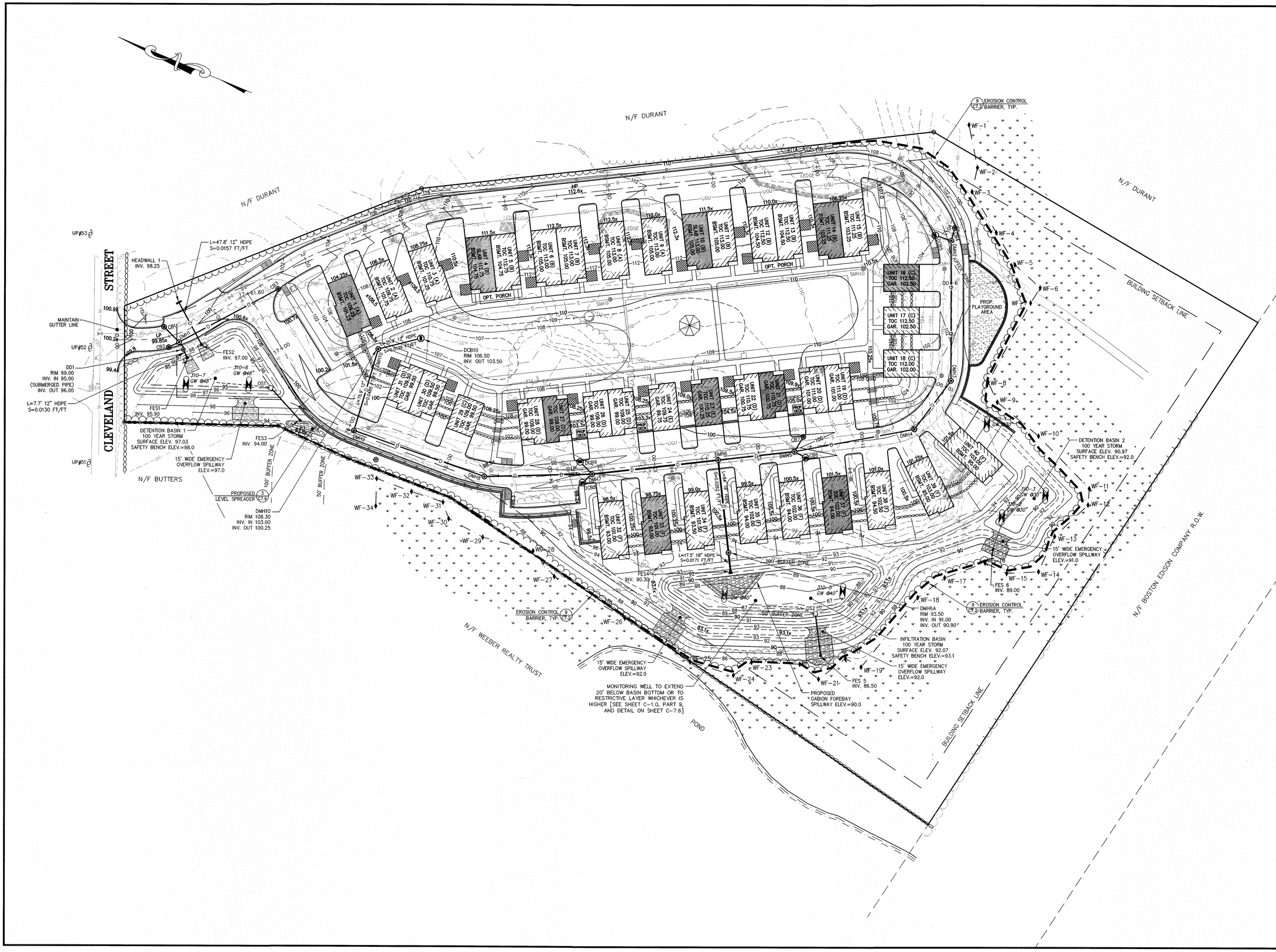

ASE

Andrews Survey & Engineering, Inc.
Land Surveying - Civil Engineering - Site Planning

P.O. Box 312, 104 Mendon Street
Uxbridge, Massachusetts 01569
P: 508-278-3897 F: 508-278-2289

500 East Washington Street
North Attleboro, Massachusetts 02760
P: 508-316-0452 F: 508-316-0963

PROJECT:

LAKELAND FARMS
TOWNHOUSE COMMUNITY
84 CLEVELAND STREET
NORFOLK, MA 02056

APPLICANT:

LAKELAND FARMS, LLC
84 CLEVELAND STREET
NORFOLK, MA 02056

REVISIONS

NO.	DATE	DESCRIPTION

CAD FILE	.\dwg\2014-111_SP.dwg
DRAWN BY	SJO, TRB
CHECKED BY	PBH, BJA
DATE	APRIL 19, 2016
PROJECT NO.	2014-111

GRAPHIC SCALE

40 0 20 40 80

(IN FEET)
1 inch = 40 feet

SHEET TITLE

GRADING & DRAINAGE PLAN

COMMONWEALTH OF MASSACHUSETTS
PAUL B. KUTNAK
CIVIL
No. 45872
REGISTERED PROFESSIONAL ENGINEER
4-19-16

DRAWING NO.

C-5.0

PLAN NO. L-4819

2016 © COPYRIGHT ANDREWS SURVEY & ENGINEERING, INC.

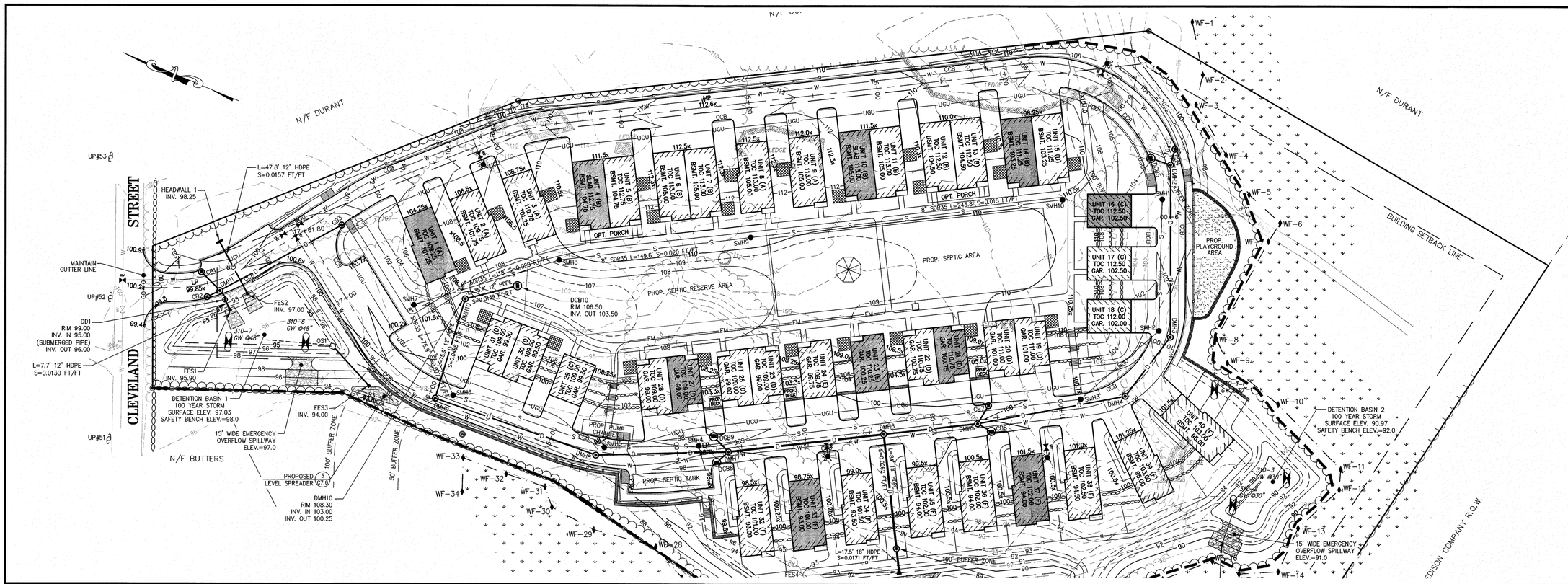

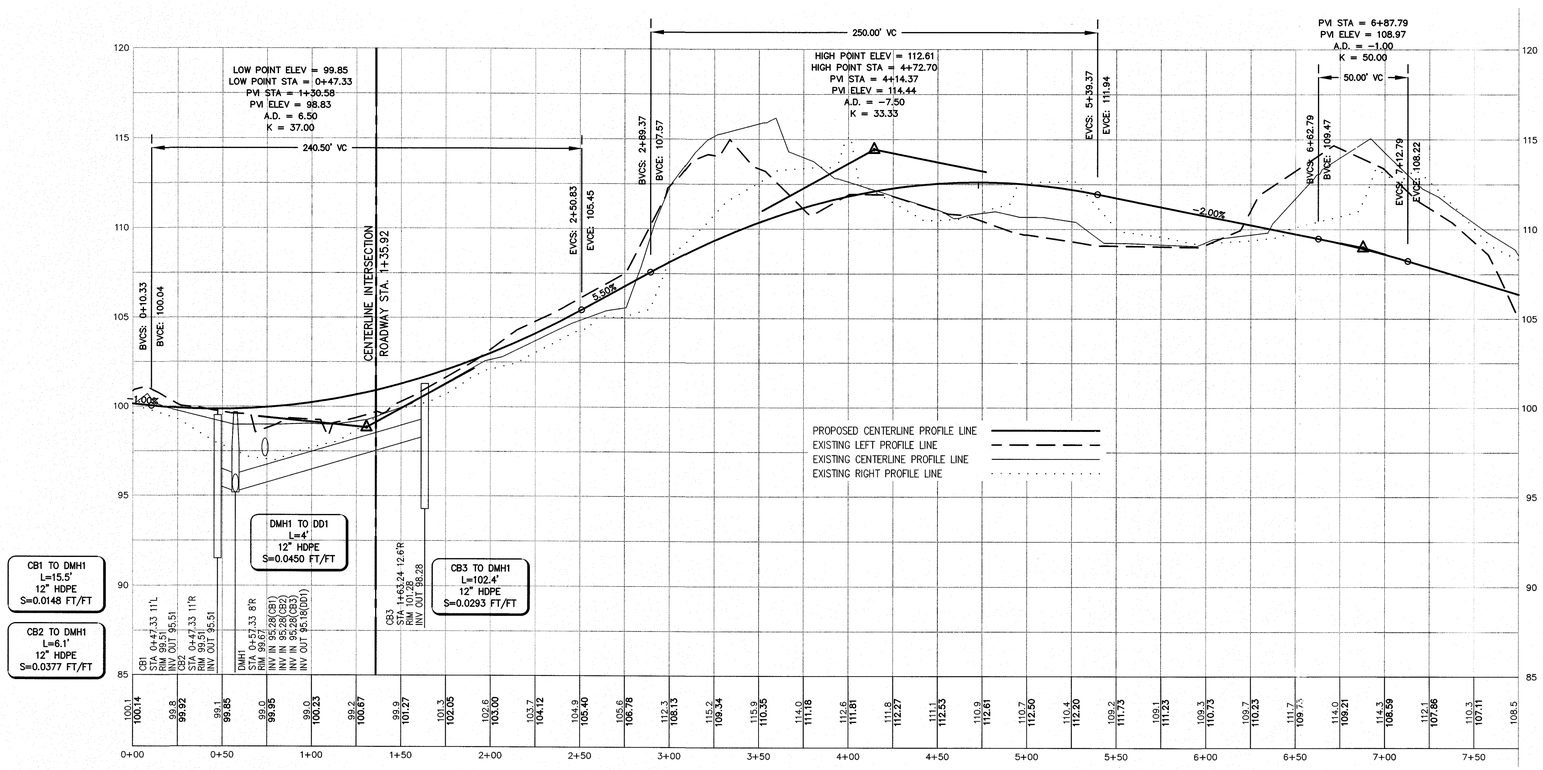

ASE

Andrews Survey & Engineering, Inc.
Land Surveying - Civil Engineering - Site Planning

P.O. Box 312, 104 Mendon Street
Uxbridge, Massachusetts 01569
P: 508-278-3897 F: 508-278-2289

500 East Washington Street
North Attleboro, Massachusetts 02760
P: 508-316-0452 F: 508-316-0963

PROJECT: LAKELAND FARMS
TOWNHOUSE COMMUNITY
84 CLEVELAND STREET
NORFOLK, MA 02056

APPLICANT: LAKELAND FARMS, LLC
84 CLEVELAND STREET
NORFOLK, MA 02056

REVISIONS

NO.	DATE	DESCRIPTION

CAD FILE	.\dwg\2014-111_SP.dwg
DRAWN BY	SJO, TRB
CHECKED BY	PBH, BJA
DATE	APRIL 19, 2016
PROJECT NO.	2014-111

GRAPHIC SCALE

40 0 20 40 80

(IN FEET)
HORIZONTAL: 1 inch = 40 feet
VERTICAL: 1 inch = 4 feet

SHEET TITLE

TOPOGRAPHIC PLAN AND PROFILE

SHEET 1 OF 2

COMMONWEALTH OF MASSACHUSETTS
PAUL B. KUTNAK
CIVIL
No. 45872
REGISTERED PROFESSIONAL ENGINEER
4/19/16

DRAWING NO.

C-6.1

PLAN NO. L-4819

2016 © COPYRIGHT ANDREWS SURVEY & ENGINEERING, INC.

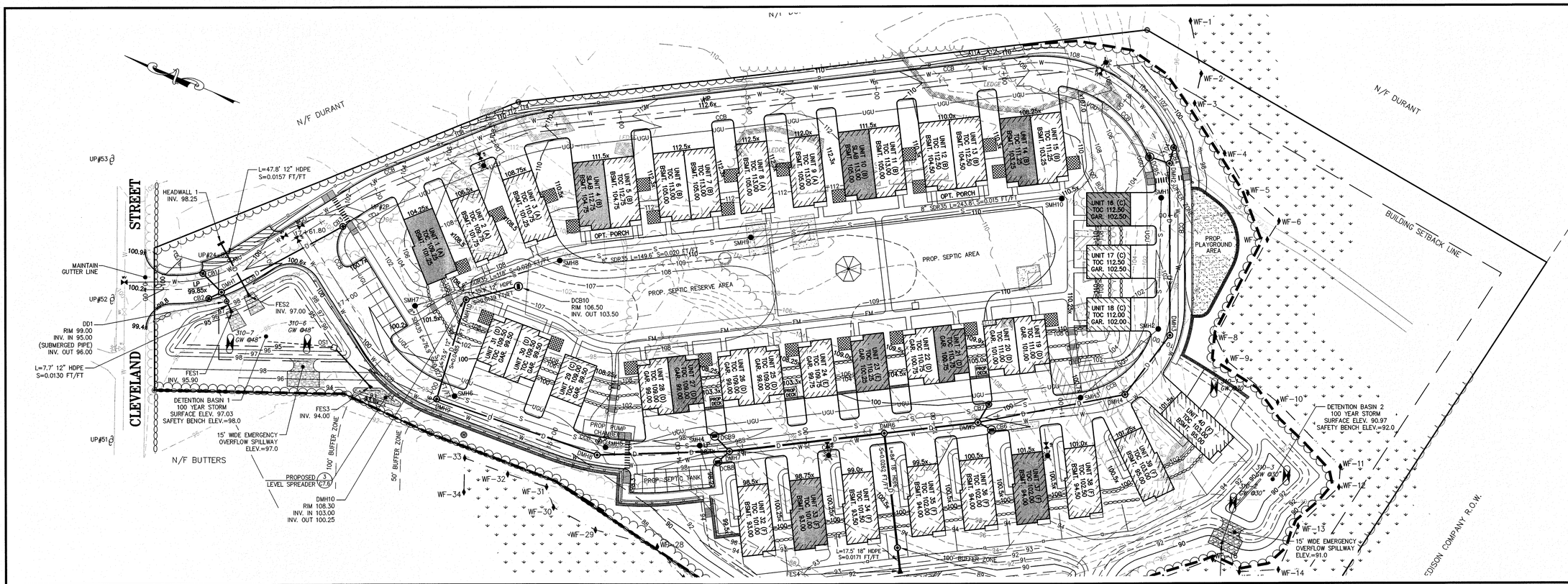

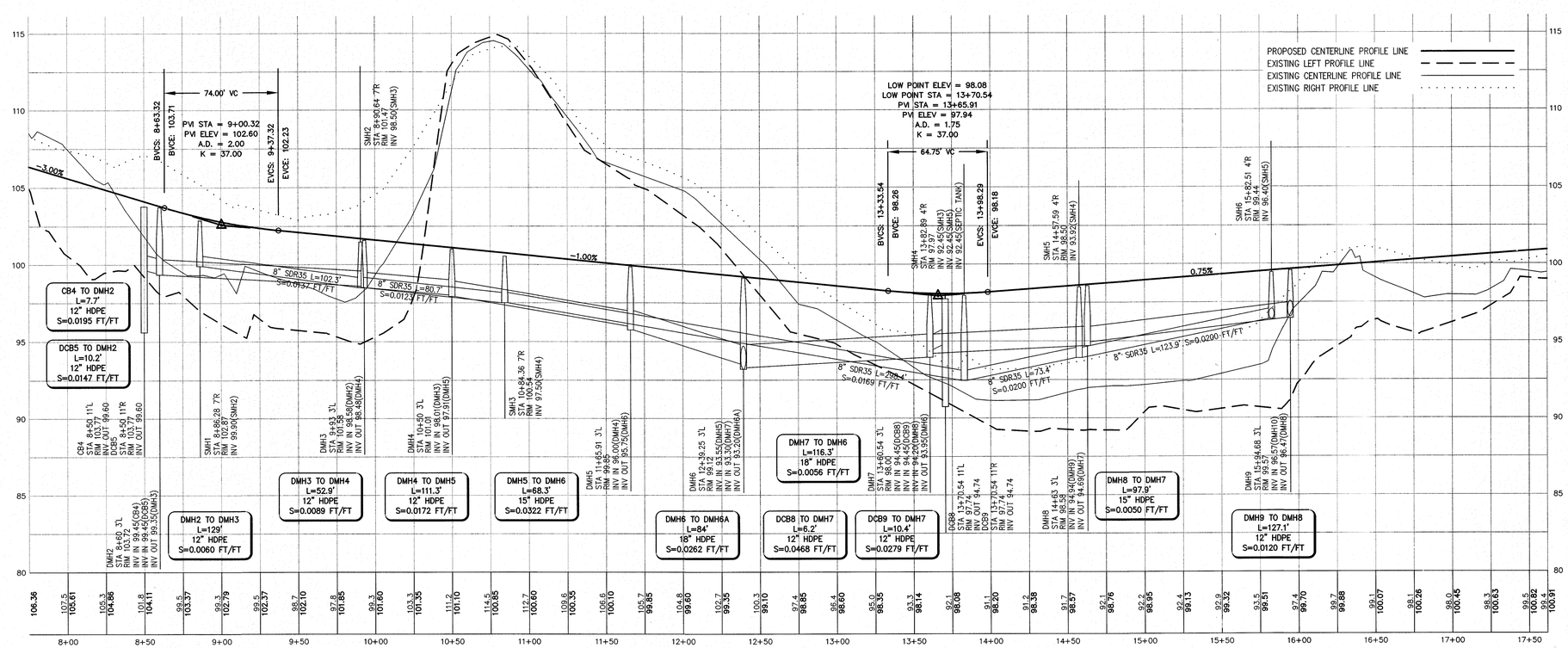

ASE

Andrews Survey & Engineering, Inc.
Land Surveying - Civil Engineering - Site Planning

P.O. Box 312, 104 Mendon Street
Uxbridge, Massachusetts 01569
P: 508-278-3897 F: 508-278-2289

500 East Washington Street
North Attleboro, Massachusetts 02760
P: 508-316-0452 F: 508-316-0963

PROJECT: LAKELAND FARMS TOWNHOUSE COMMUNITY 84 CLEVELAND STREET NORFOLK, MA 02056

APPLICANT: LAKELAND FARMS, LLC 84 CLEVELAND STREET NORFOLK, MA 02056

REVISIONS

NO.	DATE	DESCRIPTION

CAD FILE	.\dwg\2014-111_SP.dwg
DRAWN BY	SJO, TRB
CHECKED BY	PBH, BJA
DATE	APRIL 19, 2016
PROJECT NO.	2014-111

GRAPHIC SCALE

40 0 20 40 80

(IN FEET)
HORIZONTAL: 1 inch = 40 feet
VERTICAL: 1 inch = 4 feet

SHEET TITLE

TOPOGRAPHIC PLAN AND PROFILE

SHEET 2 OF 2

COMMONWEALTH OF MASSACHUSETTS
PHILIP B. KUTINAK
CIVIL
No. 45872
REGISTERED PROFESSIONAL ENGINEER
4-19-16

DRAWING NO.

C-6.2

PLAN NO. L-4819

2016 © COPYRIGHT ANDREWS SURVEY & ENGINEERING, INC.

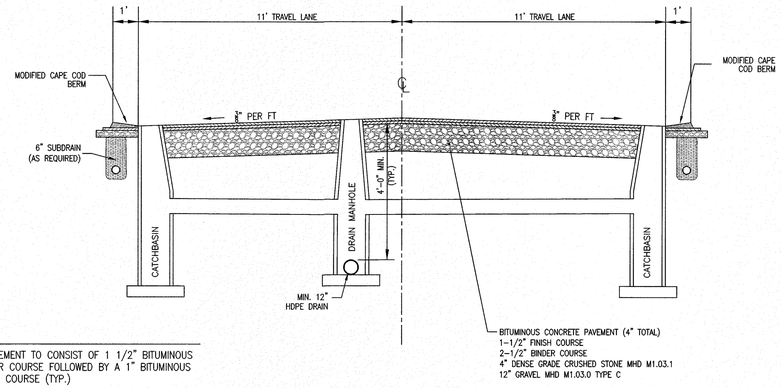

NOTES:

1. SIDEWALK PAVEMENT TO CONSIST OF 1 1/2" BITUMINOUS CONCRETE BINDER COURSE FOLLOWED BY A 1" BITUMINOUS CONCRETE FINISH COURSE (TYP.)

1 ROADWAY CROSS SECTION

SCALE: N.T.S.

NOTES:

[1] MHD M3.11.03 CLASS I, TYPE I-1 BITUMINOUS CONCRETE (1" WEARING COURSE ON 1-1/2" BINDER COURSE). 1/2" MAXIMUM AGGREGATE OR PARTICLE SIZE. COMPACT TO TEST AVERAGE OF 95%. NO TEST LOWER THAN 93%.

[2] SLOPE 5% MAXIMUM.

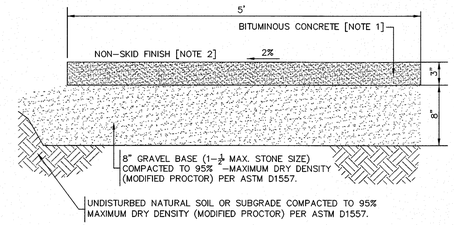

2 BITUMINOUS CONCRETE SIDEWALK

SCALE: N.T.S.

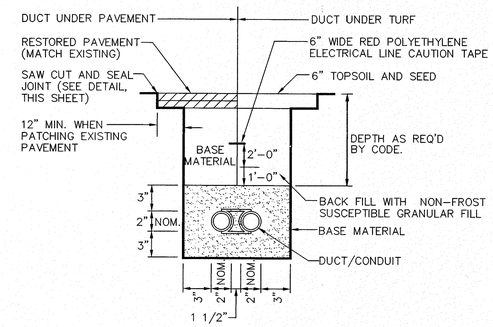

3 UNENCASED DUCT/CONDUIT DETAIL

SCALE: N.T.S.

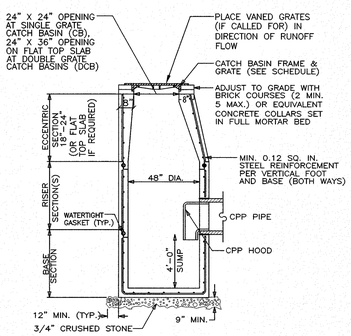

SECTION

NOTES:

1. USE 4-FLANGE LEBARON LF248-2 GRATES AT ALL CB STRUCTURES.
2. SUBMIT SHOP DRAWINGS FOR APPROVAL.
3. REINFORCED STEEL CONFORMS TO LATEST A185 SPEC. 0.12 SQ. IN./LINEAL FT. (0.15 SQ. IN. FOR 60" DIA) AND BASE BOTTOM.
4. CONCRETE COMPRESSIVE STRENGTH 4000 PSI MIN.
5. JOINT SEALANT SHALL BE SYNTHETIC RUBBER GASKET THAT COMPLIES W/ C-443 OR C-361.

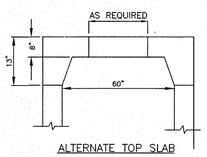

ALTERNATE TOP SLAB SECTION

(STEEL REINFORCED FOR HS-20 LOADING)

4 PRECAST CONCRETE SINGLE GRATE (CB) CATCH BASIN & DOUBLE GRATE (DCB) DEEP SUMP CATCH BASIN

SCALE: N.T.S.

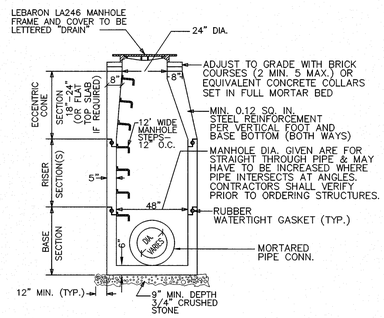

SECTION

NOTES:

1. REINFORCED STEEL CONFORMS TO LATEST A185 SPEC. 0.12 SQ. IN./LINEAL FT. (0.15 SQ. IN. FOR 60" DIA) AND BASE BOTTOM.
2. CONCRETE COMPRESSIVE STRENGTH 4000 PSI MIN.
3. MANHOLE DESIGN CONFORMS TO LATEST ASTM C478 SPEC. FOR "PRECAST REINFORCED CONCRETE MANHOLE SECTIONS".
4. JOINT SEALANT SHALL BE SYNTHETIC RUBBER GASKET THAT COMPLIES W/ C-443 OR C-361. 5. BASE SECTION SHALL BE ONE POUR MONOLITHIC.

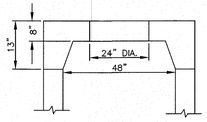

ALTERNATE TOP SLAB SECTION

(STEEL REINFORCED FOR HS-20 LOADING)

5 TYPICAL PRECAST CONCRETE 48" DIAMETER DRAIN MANHOLE (DMH) FOR PIPE DIAMETERS 24" OR LESS

SCALE: N.T.S.

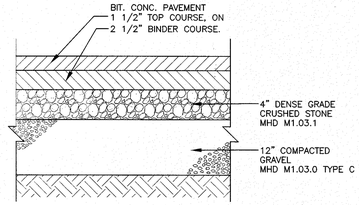

6 BITUMINOUS CONCRETE PAVEMENT DETAIL

SCALE: N.T.S.

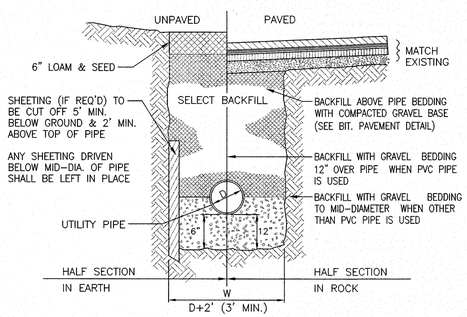

7 TYPICAL UTILITY TRENCH DETAIL

SCALE: N.T.S.

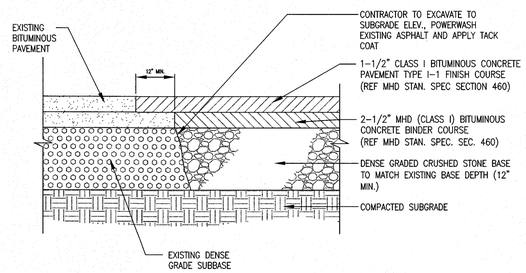

8 PAVEMENT JOINTING

SCALE: N.T.S.

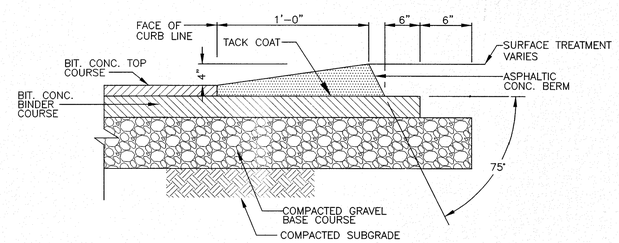

9 MODIFIED ASPHALTIC CAPE COD BERM (CCB)

SCALE: N.T.S.

ASE

Andrews Survey & Engineering, Inc.
Land Surveying - Civil Engineering - Site Planning

P.O. Box 312, 104 Mendon Street
Uxbridge, Massachusetts 01569
P: 508-278-3897 F: 508-278-2289

500 East Washington Street
North Attleboro, Massachusetts 02760
P: 508-316-0452 F: 508-316-0963

PROJECT: LAKELAND FARMS TOWNHOUSE COMMUNITY 84 CLEVELAND STREET NORFOLK, MA 02056

APPLICANT: LAKELAND FARMS, LLC 84 CLEVELAND STREET NORFOLK, MA 02056

REVISIONS

NO.	DATE	DESCRIPTION

CAD FILE	.\dwg\2014-111_SP.dwg
DRAWN BY	SJO, TRB
CHECKED BY	PBH, BJA
DATE	APRIL 19, 2016
PROJECT NO.	2014-111

SHEET TITLE

CONSTRUCTION DETAILS

SHEET 1 OF 6

COMMONWEALTH OF MASSACHUSETTS PAUL B. HUTNAK CIVIL No. 45872 REGISTERED PROFESSIONAL ENGINEER 4-19-16

DRAWING NO.

C-7.1

PLAN NO. L-4819

2016 © COPYRIGHT ANDREWS SURVEY & ENGINEERING, INC.

F:\ACAD\2014 PROJECTS\2014-111\DWG\2014-111_SP.DWG 04-18-16 9:47:39 PM - LAYOUT C-7.1

S.I. STOREY LUMBER CO., INC.
285 SIKE STOREY RD NW, P.O. BOX 99
ARMUCHEE, GA 30105-0099
TOLL FREE: 1-888-934-1605
PHONE: (706) 234-1605
FAX: (706) 235-8132
www.timbarrier.com

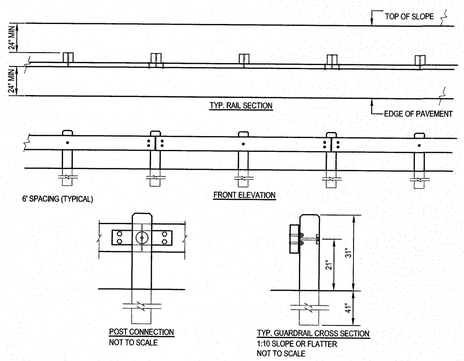

NOTES:
1. INSTALLATION TO BE COMPLETED IN ACCORDANCE WITH MANUFACTURER'S SPECIFICATIONS.
2. DO NOT SCALE DRAWINGS.
3. IF TOP OF SLOPE IS CLOSER THAN 24" INCREASE POST LENGTH TO 7'.
4. DRIVE POSTS OR AUGER, BACKFILL WITH NATIVE SOIL AND COMPACT EVERY 12".
5. ALL TIMBER #1 S4S SOUTHERN PINE, PRESSURE TREATED: AWPA-C14, WOOD FOR USE IN HWY. CONSTR.
6. TYP. POST: 8" X 8" X 6' - TYP. RAIL: 4" X 12" X 11' 11 1/2"
7. FASTENERS: ASTM A307; A242; F436 TYPE 3; A563 DH3.
8. TIMBARRIER™ SPLICE PLATE & PLATE WASHER ASTM-A588.
9. UNDER EACH BOLT HEAD ON FACE OF RAIL INSTALL ONE 7/8" WASHER.
10. REFER TO DRAWINGS 651-003b OR 651-003c FOR TERMINAL DETAILS
11. CONTRACTORS NOTE: FOR PRODUCT AND COMPANY INFORMATION VISIT www.CADdetails.com/info REFERENCE NUMBER 651-003.

1 "TIMBARRIER" GUARDRAIL
SCALE: N.T.S.

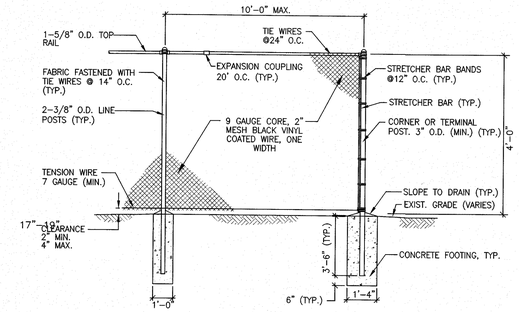

2 CHAIN LINK FENCE (CLF)
SCALE: N.T.S.

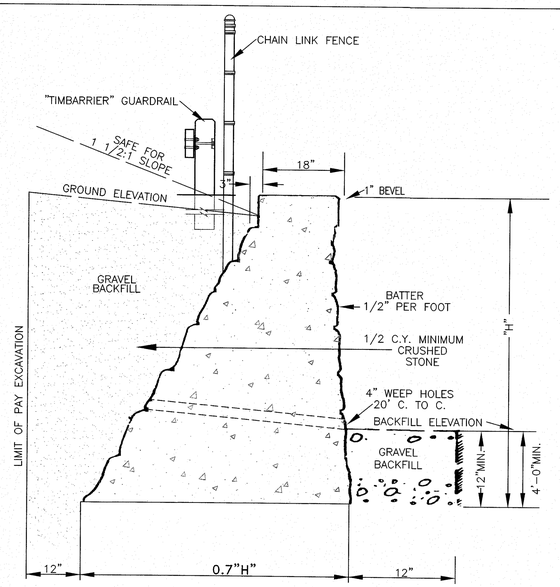

NOTES:
1. ALL DIMENSIONS SHOWN ARE MINIMUM.
2. FINAL DESIGN BY OTHERS.

4 CONCRETE RETAINING WALL
SCALE: N.T.S.

NOTES:
1. SEE PLANS FOR CURB TYPE.
2. CURBS AND WALKS ALONG ACCESSIBLE ROUTES SHALL MEET OR EXCEED THE APPLICABLE REGULATIONS OF THE AMERICANS WITH DISABILITIES ACT (ADA) OF JANUARY 1992.
3. THE MAXIMUM ALLOWABLE SIDEWALK AND CURB RAMP CROSS SLOPES SHALL BE 2% (1% MIN.)
4. THE MAXIMUM ALLOWABLE SLOPE OF ACCESSIBLE ROUTES, EXCLUDING CURB RAMPS SHALL BE 5%.
5. THE MAXIMUM ALLOWABLE SLOPE OF ACCESSIBLE ROUTE CURB RAMPS SHALL BE 8%.
6. MAINTAIN A MINIMUM OF 3 FEET CLEAR AT ANY PERMANENT OBSTACLE IN ACCESSIBLE ROUTES (I.E., TREE WELLS, HYDRANTS, UTILITY POLES, SIGNS, ETC.)
7. GRADE BASE OF RAMP TO PREVENT PONDING.
8. RAMP CONSTRUCTION SHALL CONFORM TO TYPICAL SIDEWALK SECTION.
9. WHERE ACCESSIBLE ROUTES ARE LESS THAN 5' IN WIDTH (EXCLUDING CURBING) A 5'X5' PASSING AREA SHALL BE PROVIDED AT INTERVALS NOT TO EXCEED 200 FEET.
10. ALL CURBING AT RAMPS SHALL BE VERTICAL CURBING SET FLUSH WHERE IT ABUTS ROADWAY.
11. ALL RAMPS SHALL BE CEMENT CONCRETE WITH ROUGHENED NON-SLIP SURFACE.

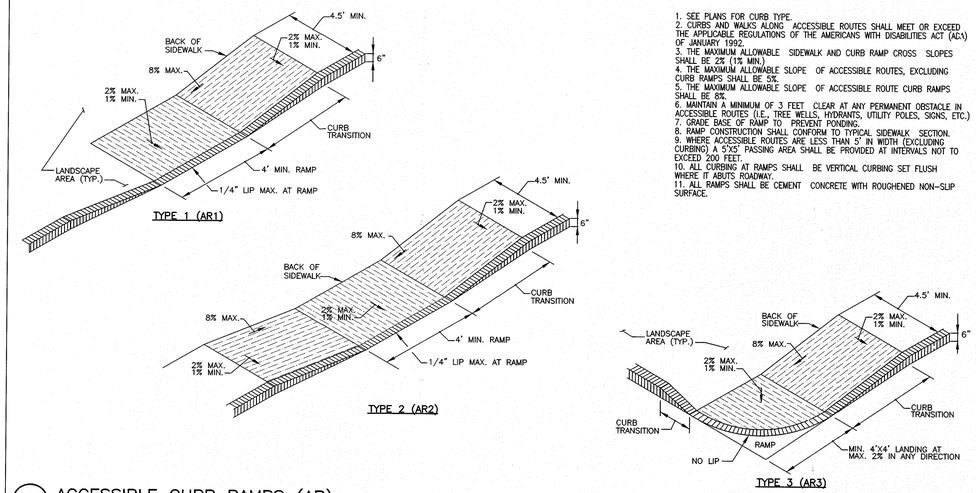

3 ACCESSIBLE CURB RAMPS (AR)
SCALE: N.T.S.

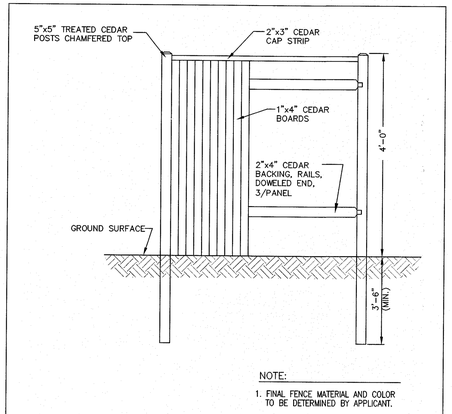

NOTE:
1. FINAL FENCE MATERIAL AND COLOR TO BE DETERMINED BY APPLICANT.

5 PRIVACY FENCE
SCALE: N.T.S.

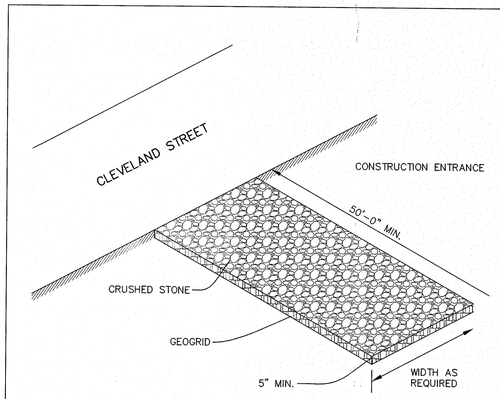

6 CONSTRUCTION ENTRANCE
SCALE: N.T.S.

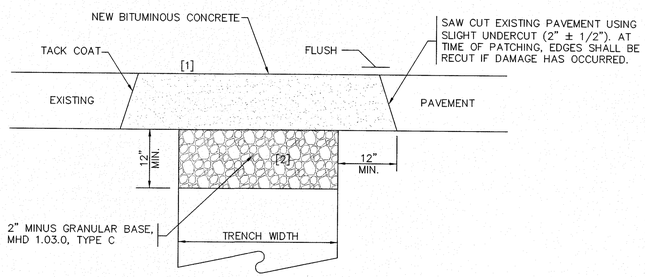

NOTES:
[1] GRANULAR BASE COMPACTION: 95% PER ASTM D-1557 MODIFIED PROCTOR METHOD
[2] BIT. CONCRETE COMPACTION: 95%

7 TRENCH PATCH
SCALE: N.T.S.

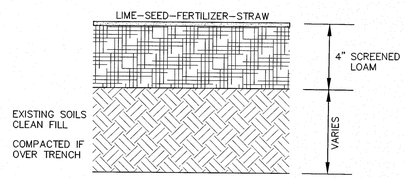

8 LOAM & SEED
SCALE: N.T.S.

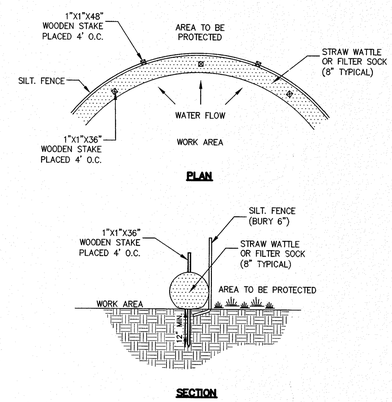

9 EROSION CONTROL BARRIER (ECB)
SCALE: N.T.S.

ASE
Andrews Survey & Engineering, Inc.
Land Surveying - Civil Engineering - Site Planning
P.O. Box 312, 104 Mendon Street
Uxbridge, Massachusetts 01569
P: 508-278-3897 F: 508-278-2289
500 East Washington Street
North Attleboro, Massachusetts 02760
P: 508-316-0452 F: 508-316-0963

PROJECT: LAKELAND FARMS TOWNHOUSE COMMUNITY 84 CLEVELAND STREET NORFOLK, MA 02056

APPLICANT: LAKELAND FARMS, LLC 84 CLEVELAND STREET NORFOLK, MA 02056

REVISIONS

NO.	DATE	DESCRIPTION

CAD FILE	.\dwg\2014-111_SP.dwg
DRAWN BY	SJO, TRB
CHECKED BY	PBH, BJA
DATE	APRIL 19, 2016
PROJECT NO.	2014-111

SHEET TITLE

CONSTRUCTION DETAILS

SHEET 2 OF 6

COMMONWEALTH OF MASSACHUSETTS PAUL B. NOTNAK CIVIL No. 45872 REGISTERED PROFESSIONAL ENGINEER 4-19-16

DRAWING NO.

C-7.2

PLAN NO. L-4819

2016 © COPYRIGHT ANDREWS SURVEY & ENGINEERING, INC.

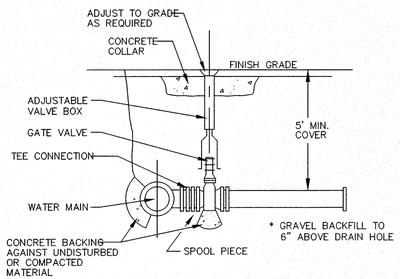

TYPICAL VALVE DETAIL

NOTES:
1. ALL FITTINGS SHALL BE COMPRESSION TYPE.
2. VALVES TO OPEN IN DIRECTION SPECIFIED BY NORFOLK DPW.
3. MECHANICAL JOINTS TO BE MEGALUG, OR APPROVED EQUAL.
4. VALVE BOXES SHALL HAVE CEMENT CONCRETE COLLARS.

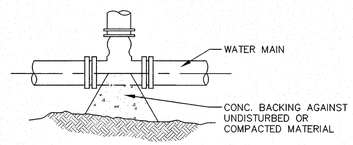

TYPICAL TEE

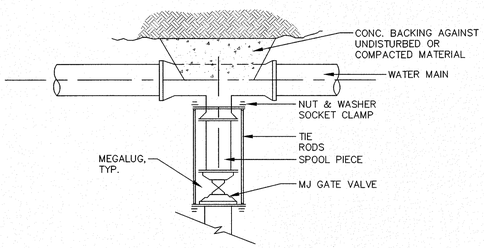

TYPICAL VALVE CONNECTION – RESTRAINED JOINT TEE

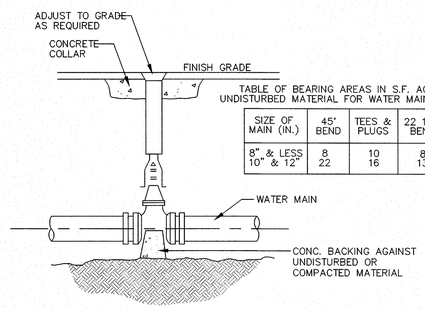

TABLE OF BEARING AREAS IN S.F. AGAINST UNDISTURBED MATERIAL FOR WATER MAIN FITTINGS

SIZE OF MAIN (IN.)	45° BEND	TEES & PLUGS	22 1/2° BEND
8" & LESS	8	10	8
10" & 12"	22	16	13

TYPICAL VALVE

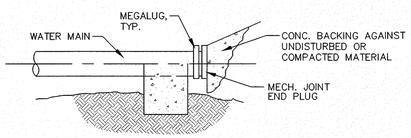

TYPICAL PLUG DETAIL

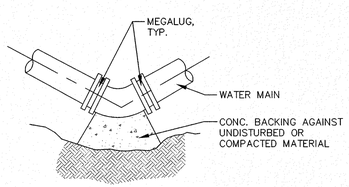

TYPICAL BEND DETAIL

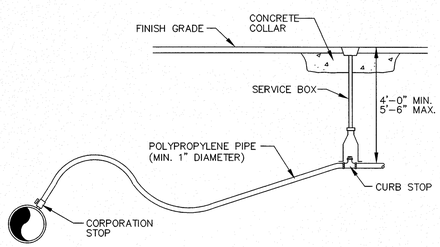

TYPICAL WATER SERVICE DETAIL

NOTE:
WATER APPURTENCIS TO CONFORM WITH LOCAL WATER COMPANY SPECIFICATIONS.

1 TYPICAL WATER SUPPLY DETAILS
SCALE: N.T.S.

MATERIAL – POST AND CAP:
1. NOMINAL 5" x 5" SQUARE SECTION POST
2. MATCHING GOTHIC CAP
3. WHITE 100% VIRGIN VINYL WITH TITANIUM DIOXIDE CONTENT FOR UV PROTECTION
4. 0.200 IN. WALL THICKNESS
5. AS MANUFACTURED BY KROY BUILDING PRODUCTES, INC. OR APPROVED EQUAL
6. JOIN CAP TO POST WITH CLEAR PVC SOLVENT CEMENT MEETING ASTM D-2564

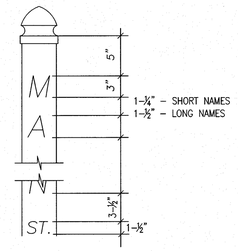

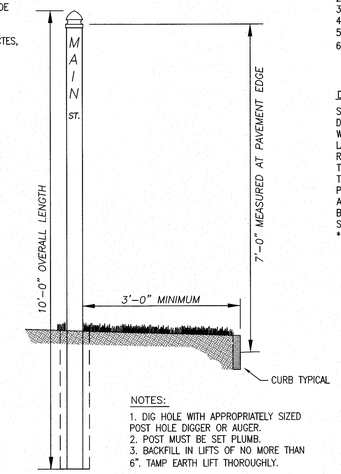

NOTES:
1. DIG HOLE WITH APPROPRIATELY SIZED POST HOLE DIGGER OR AUGER.
2. POST MUST BE SET PLUMB.
3. BACKFILL IN LIFTS OF NO MORE THAN 6". TAMP EARTH LIFT THOROUGHLY.

LETTERING:
1. HELVETICA MEDIUM STYLE
2. VINYL – FOR EXTERIOR USE
3. PRESSURE SENSITIVE ADHESIVE
4. REFLECTIVE BLACK
5. STREET NAME – 3" HIGH LETTERS
6. DESIGNATION (ST, DR, ETC) 1-½" HIGH

DESIGNATION ABBREVIATIONS:

STREET	* ST
DRIVE	* DR
WAY	* WAY
LANE	* LA
ROAD	* RD
TERRACE	* TER
TRAIL	* TR
PATH	* PATH
AVENUE	* AVE
BOULEVARD	* BLVD

SUBMIT OTHERS FOR APPROVAL
NO PERIODS USED

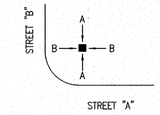

PULL UP DETERRANT:
1. STAINLESS STEEL EYEBOLTS AND NUTS
2. SNUG NUTS ONLY – DO NOT OVERTIGHTEN
3. DRIVEN ½" REBAR 2 FOOT MINIMUM LENGTH

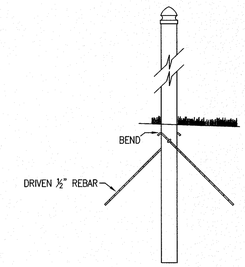

2 TYPICAL STREET SIGN
SCALE: N.T.S.

NOTES:
1. SEE TRAFFIC CONTROL SCHEDULE FOR EXACT MOUNTING HEIGHT.
2. CHANNEL POST SECTIONS TO BE CONNECTED WITH AT LEAST TWO(2) APPROPRIATELY SIZED GALVANIZED BOLTS W/ LOCK WASHERS AND NUTS.

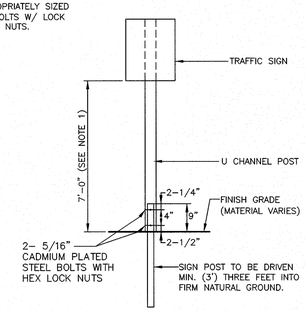

3 TYPICAL BREAKAWAY SIGN POST DETAIL
SCALE: N.T.S.

SIGN NO.	SIGN	SIZE AND COLOR
R1-1	STOP	30"X30"; WHITE ON RED
D-3	STREET NAME	6" X VARIES"; WHITE ON GREEN 3" MIN LETTERS
R1-2	YIELD	36"X36"X36"; RED ON WHITE
	NOT A THRU STREET	18"X24"; BLACK ON WHITE

NOTE:
ALL SIGNS ARE REFLECTORIZED AND HAVE 7'-0" CHANNEL MOUNTING HEIGHT.

4 TRAFFIC CONTROL SIGNAGE
SCALE: N.T.S.

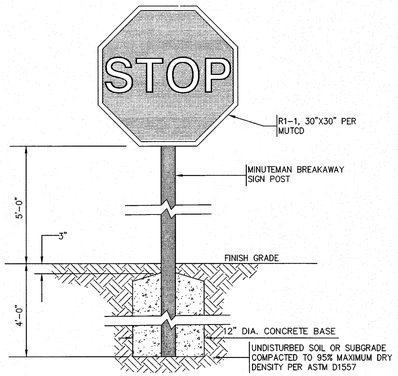

5 STOP SIGN
SCALE: N.T.S.

NOTES:
1. WHERE GATE BOX NOT IN PAVEMENT, POUR 6" DEEP x10"x10" CONC. COLLAR WITH 6"x6" W.W. MESH.
2. SEE PLAN FOR HYDRANTS DESIGNATED TO BE RELOCATED.
3. HYDRANT AND CONNECTIONS SHALL CONFORM TO TOWN OF UXBRIDGE DPW SPECIFICATIONS.
4. MECHANICAL JOINTS TO BE MEGALUG, OR APPROVED EQUAL.

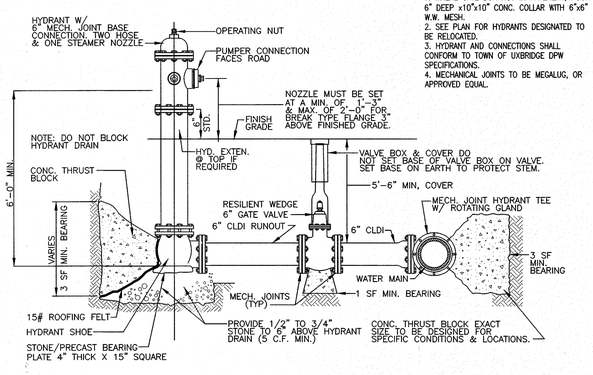

6 TYPICAL FIRE HYDRANT CONNECTION DETAIL
SCALE: N.T.S.

ASE
Andrews Survey & Engineering, Inc.
Land Surveying - Civil Engineering - Site Planning
P.O. Box 312, 104 Mendon Street
Uxbridge, Massachusetts 01569
P: 508-278-3897 F: 508-278-2289
500 East Washington Street
North Attleboro, Massachusetts 02760
P: 508-316-0452 F: 508-316-0963

PROJECT: LAKELAND FARMS TOWNHOUSE COMMUNITY 84 CLEVELAND STREET NORFOLK, MA 02056

APPLICANT: LAKELAND FARMS, LLC 84 CLEVELAND STREET NORFOLK, MA 02056

REVISIONS

NO.	DATE	DESCRIPTION

CAD FILE	.\dwg\2014-111_SP.dwg
DRAWN BY	SJO, TRB
CHECKED BY	PBH, BJA
DATE	APRIL 19, 2016
PROJECT NO.	2014-111

SHEET TITLE

CONSTRUCTION DETAILS

SHEET 3 OF 6

COMMONWEALTH OF MASSACHUSETTS PHILIP B. LUTTNAK CIVIL No. 45872 REGISTERED PROFESSIONAL ENGINEER 4-19-16

DRAWING NO. C-7.3

PLAN NO. L-4819

2016 © COPYRIGHT ANDREWS SURVEY & ENGINEERING, INC.

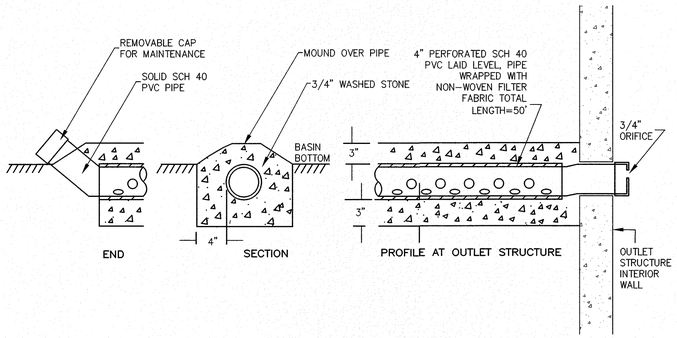

1 WATER QUALITY / DRAWDOWN DEVICE (BASIN 1 & INF. BASIN)
SCALE: N.T.S.

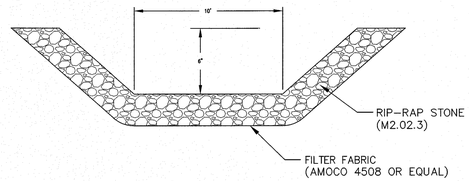

2 STONE RIP-RAP EMERGENCY SPILLWAY
SCALE: N.T.S.

NOTES:

1. MINIMUM STONE DIAMETER: 6"
2. MINIMUM WEIGHT OF STONE: 50 LBS.
3. MAXIMUM WEIGHT OF STONE: 125 LBS.
4. PLACE ALL RIP-RAP OVER FILTER FABRIC, AMOCO 4508 OR APPROVED EQUAL.

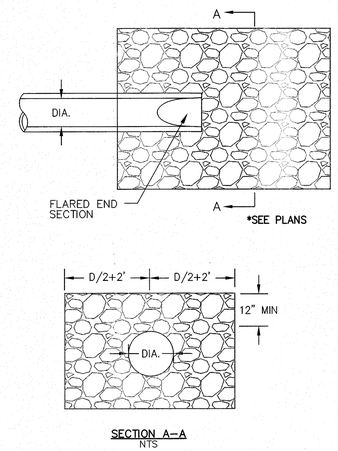

SECTION A-A
NTS

3 STONE RIP-RAP FOR PIPE ENDS
SCALE: N.T.S.

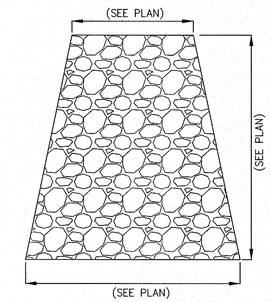

TYPICAL OUTFALL RIP-RAP APRON

PIPE DIAMETER (INCHES)						
DIAMETER (INCHES)	12	15	18	24	30	36
A (INCHES)	6.5	6.5	7.5	7.5	7.5	7.5
B (MAX) (INCHES)	10.0	10.0	15.0	18.0	22.0	25.0
H (INCHES)	6.5	6.5	6.5	6.5	8.6	8.6
L (INCHES)	25.0	25.0	32.0	36.0	58.0	58.0
W (INCHES)	29.0	29.0	35.0	45.0	63.0	63.0

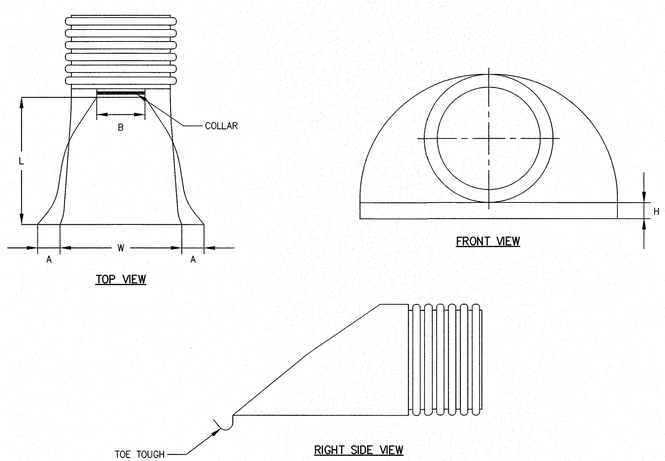

4 CORRUGATED POLYETHYLENE FLARED-END SECTION (FES)
SCALE: N.T.S.

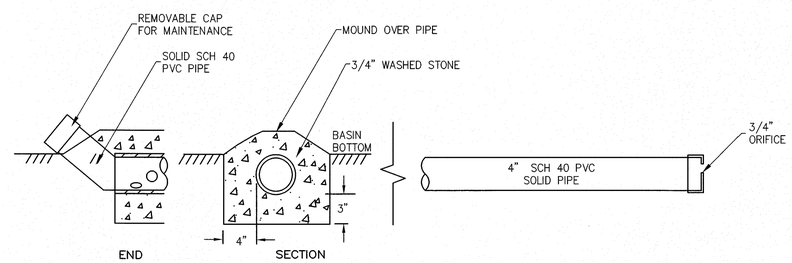

5 LOW FLOW DRAIN (BASIN 2)
SCALE: N.T.S.

NOTES:

1. EMBANKMENT TO BE CONSTRUCTED OF CLEAN FILL FREE OF ORGANIC SOILS/MATERIALS WITH NO STONES OVER 12" MAX. DIMENSION. EMBANKMENT TO TO BE CONSTRUCTED IN COMPACTED LIFTS NOT TO EXCEED 8".
2. BASIN BOTTOM AND SIDE SLOPES (INSIDE AND OUT) TO BE COVERED WITH 4" LOAM AND SEED.
3. RIPRAP SPILLWAY STONE TO BE 4" MINIMUM, 6" MAXIMUM.

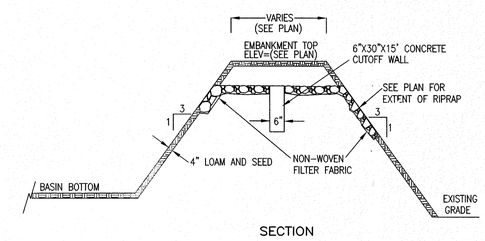

6 TYPICAL EMBANKMENT/SPILLWAY
SCALE: N.T.S.

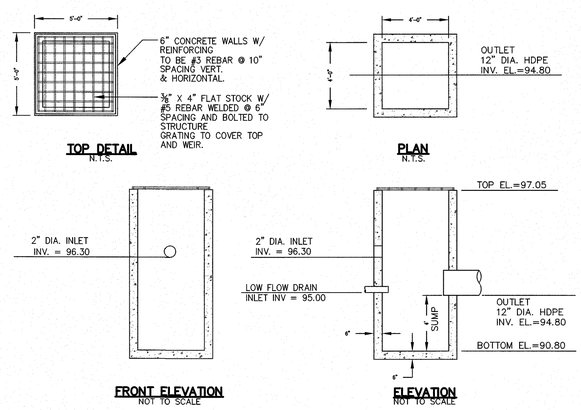

7 OUTLET STRUCTURE (OS1) – ORIFICE/GRATE DETAIL
SCALE: N.T.S.

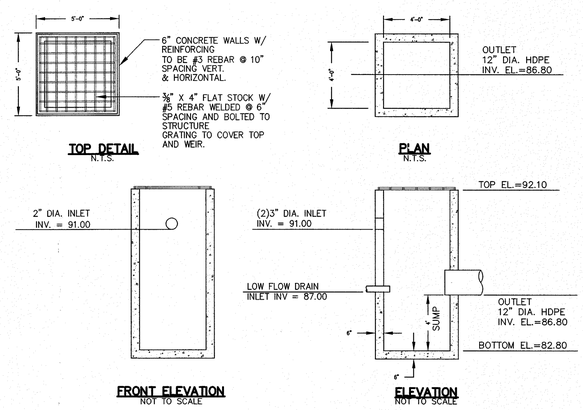

8 OUTLET STRUCTURE (OS2) – ORIFICE/GRATE DETAIL
SCALE: N.T.S.

ASE
Andrews Survey & Engineering, Inc.
Land Surveying - Civil Engineering - Site Planning
P.O. Box 312, 104 Mendon Street
Uxbridge, Massachusetts 01569
P: 508-278-3897 F: 508-278-2289
500 East Washington Street
North Attleboro, Massachusetts 02760
P: 508-316-0452 F: 508-316-0963

PROJECT: LAKELAND FARMS TOWNHOUSE COMMUNITY 84 CLEVELAND STREET NORFOLK, MA 02056

APPLICANT: LAKELAND FARMS, LLC 84 CLEVELAND STREET NORFOLK, MA 02056

REVISIONS

NO.	DATE	DESCRIPTION

CAD FILE	.\dwg\2014-111_SP.dwg
DRAWN BY	SJO, TRB
CHECKED BY	PBH, BJA
DATE	APRIL 19, 2016
PROJECT NO.	2014-111

SHEET TITLE

CONSTRUCTION DETAILS

SHEET 4 OF 6

COMMONWEALTH OF MASSACHUSETTS PAUL B. HJTNAK CIVIL No. 45872 REGISTERED PROFESSIONAL ENGINEER 4-19-16

DRAWING NO.

C-7.4

PLAN NO. L-4819

2016 © COPYRIGHT ANDREWS SURVEY & ENGINEERING, INC.

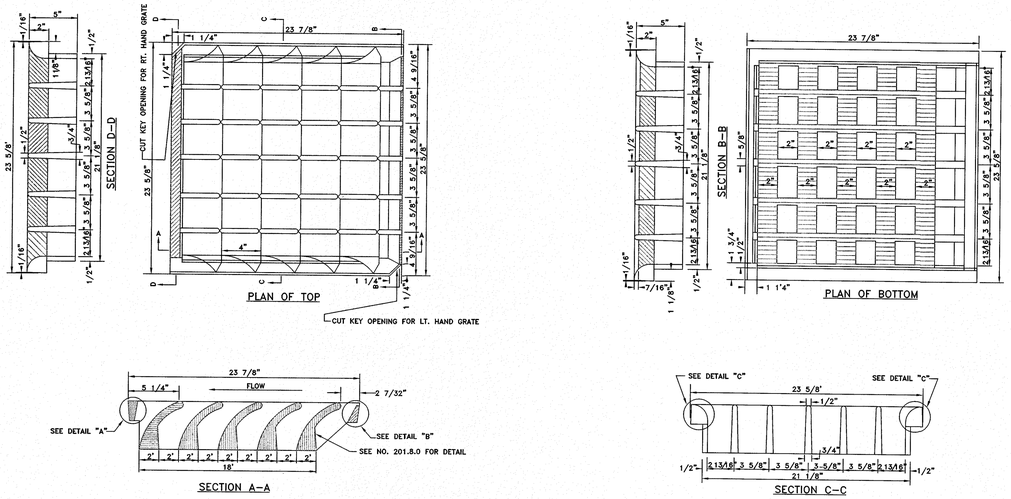

1 CASCADE CATCH BASIN GRATE (LEBARON LK120D)
SCALE: N.T.S.

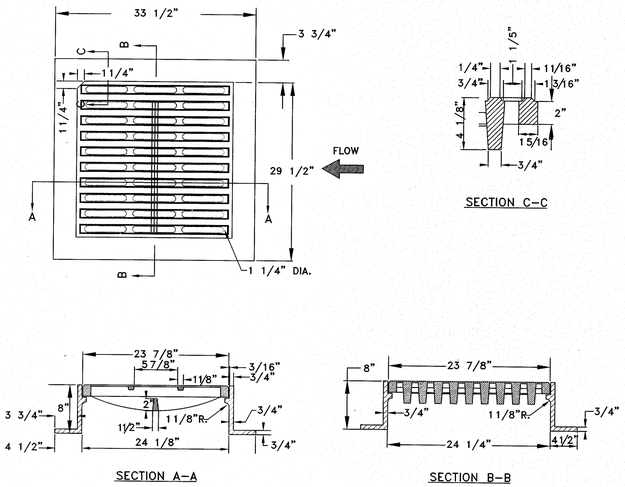

2 CATCH BASIN GRATE (LEBARON LF248–2)
SCALE: N.T.S.

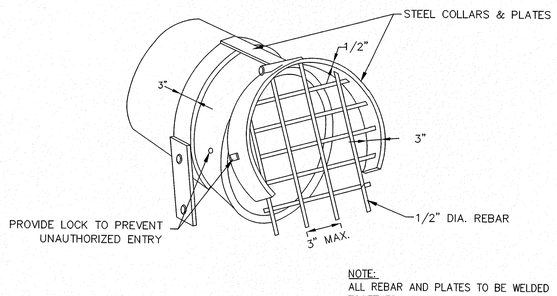

NOTE:
ALL REBAR AND PLATES TO BE WELDED TOGETHER.

3 OUTLET PROTECTION DETAIL
SCALE: N.T.S.

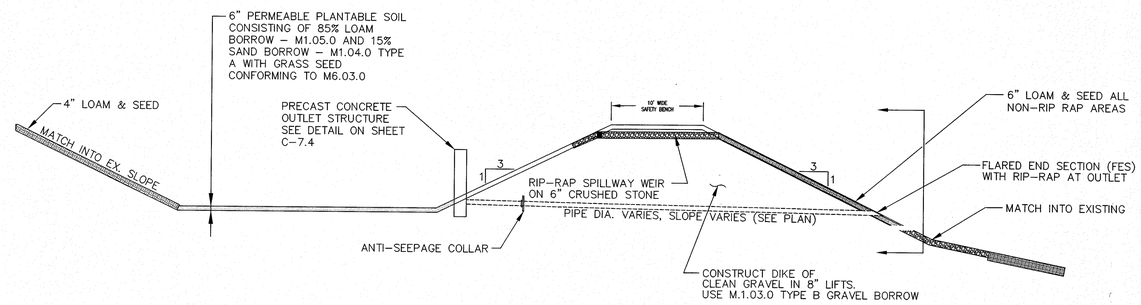

NOTE:
INFILTRATION BASIN SHALL NOT BE USED AS TEMPORARY SEDIMENT BASINS DURING CONSTRUCTION.

4 INFILTRATION BASIN CROSS SECTION (BASIN 1 & INF. BASIN)
SCALE: N.T.S.

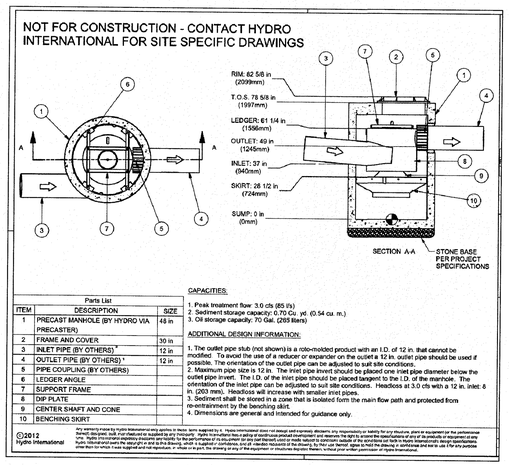

5 DOWNSTREAM DEFENDER DETAIL
SCALE: N.T.S.

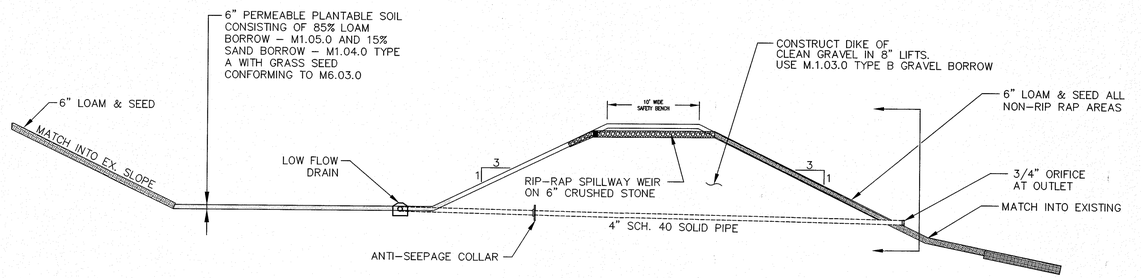

NOTE:
INFILTRATION BASIN SHALL NOT BE USED AS TEMPORARY SEDIMENT BASINS DURING CONSTRUCTION.

6 INFILTRATION BASIN CROSS SECTION (BASIN 2)
SCALE: N.T.S.

ASE
Andrews Survey & Engineering, Inc.
Land Surveying - Civil Engineering - Site Planning
P.O. Box 312, 104 Mendon Street
Uxbridge, Massachusetts 01569
P: 508-278-3897 F: 508-278-2289
500 East Washington Street
North Attleboro, Massachusetts 02760
P: 508-316-0452 F: 508-316-0963

PROJECT: LAKELAND FARMS TOWNHOUSE COMMUNITY 84 CLEVELAND STREET NORFOLK, MA 02056

APPLICANT: LAKELAND FARMS, LLC 84 CLEVELAND STREET NORFOLK, MA 02056

REVISIONS

NO.	DATE	DESCRIPTION

CAD FILE	.\dwg\2014–111_SP.dwg
DRAWN BY	SJO, TRB
CHECKED BY	PBH, BJA
DATE	APRIL 15, 2016
PROJECT NO.	2014–111

SHEET TITLE

CONSTRUCTION DETAILS

SHEET 5 OF 6

PAUL B. HUTNAK CIVIL No. 45872 REGISTERED PROFESSIONAL ENGINEER COMMONWEALTH OF MASSACHUSETTS
4-19-16

DRAWING NO. C–7.5

PLAN NO. L–4819

2016 © COPYRIGHT ANDREWS SURVEY & ENGINEERING, INC.

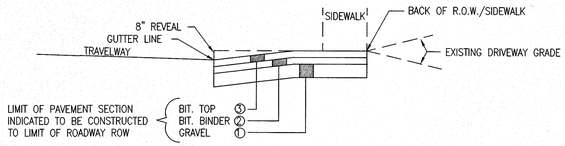

TYPE	MAX. Ⓐ	MIN.	MAX. Ⓑ	MIN.	①	②	③
RESIDENTIAL	12'	8'	10'	5'	12"	2"	1"
COMMERCIAL	24'	20'	30'	20'	12"	2.5"	1.5"
MAXIMUM ALLOWABLE GRADE CHANGE*				DESIRABLE		MAXIMUM	
LOW VOLUME DRIVEWAY ON LOCAL STREET				± 6%		± 6% (CREST CURVE)	
						± 9% (SAG CURVE)	

*MORE ABRUPT CHANGES REQUIRE VERTICAL CURVES AT LEAST 10' LONG

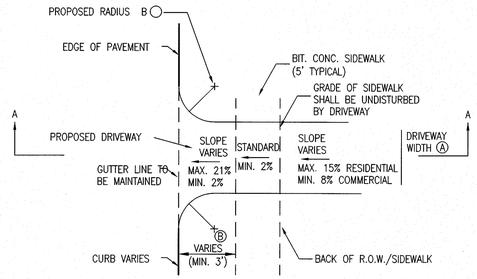

1 TYPICAL DRIVEWAY OPENING
SCALE: N.T.S.

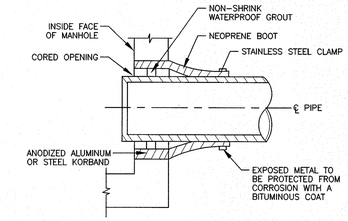

2 SEWER PIPE CONNECTION
SCALE: N.T.S.

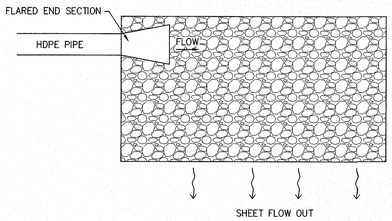

PLAN

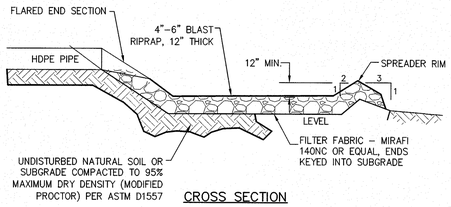

CROSS SECTION

3 LEVEL SPREADER
SCALE: N.T.S.

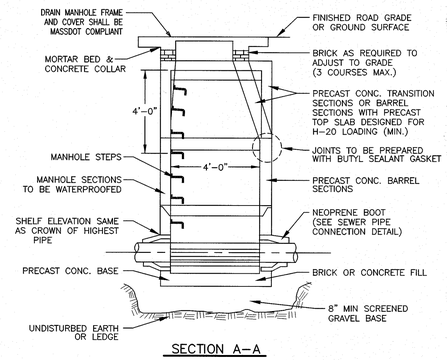

SECTION A-A

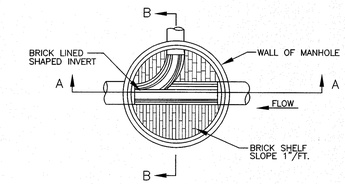

PLAN
NOT TO SCALE

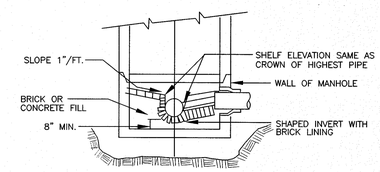

SECTION B-B
NOT TO SCALE

4 TYPICAL PRECAST CONCRETE 48" DIAMETER SEWER MANHOLE (SMH)
SCALE: N.T.S.

NOTES:
[1] CONCRETE PIPE ENCASEMENT TO EXTEND 10 FT ALONG SEWER LINE AND WATER LINE FROM POINT OF INTERSECTION.
[2] DISTANCE EQUAL TO PIPE DIAMETER.
[3] CONCRETE PIPE ENCASEMENT REQUIRED WHENEVER PROPOSED SEWER MAIN/LATERAL IS WITHIN 10' OF PROPOSED WATER MAIN/SERVICE.

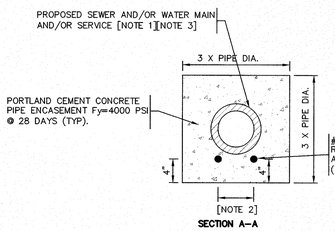

SECTION A-A

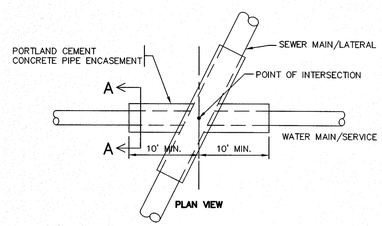

PLAN VIEW

5 PIPE ENCASEMENT
SCALE: N.T.S.

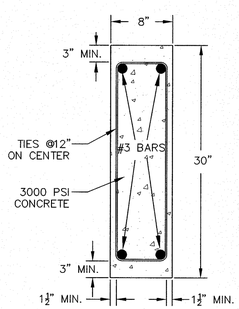

6 CUTOFF WALL DETAIL
SCALE: N.T.S.

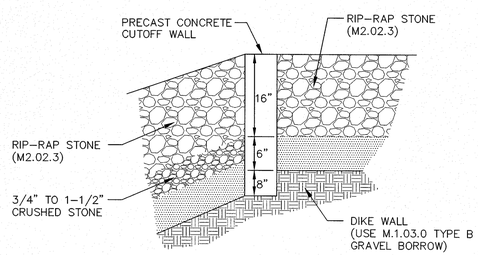

7 CUTOFF WALL CONFIGURATION DETAIL
SCALE: N.T.S.

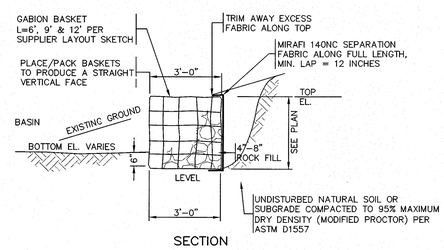

SECTION

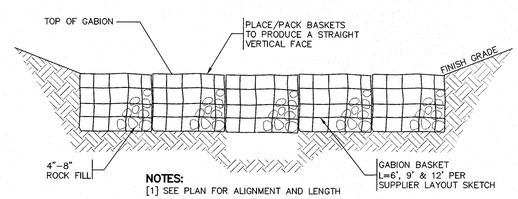

NOTES:
[1] SEE PLAN FOR ALIGNMENT AND LENGTH

PROFILE

8 GABION FOREBAY DETAIL
SCALE: N.T.S.

NOTES:
1. EMBANKMENT TO BE CONSTRUCTED OF CLEAN FILL FREE OF MONITORING WELL TO BE MINIMUM 2IN DIAMETER PERFORATED SCH-40 PVC PIPE.
2. PIPE SHALL BE WRAPPED IN FILTER FABRIC IF INSTALLED IN OPEN HOLE.
3. END OF PIPE TO BE HAVE SCREW CAP AND BE RAISED 1 FOOT ABOVE THE SURROUNDING GROUND.

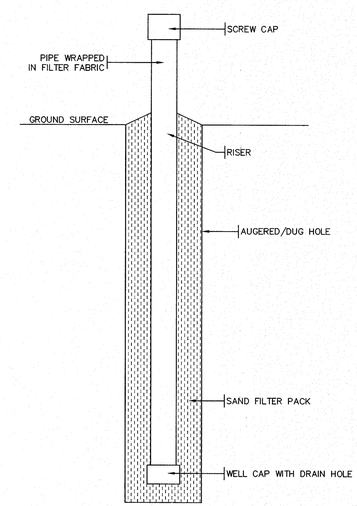

9 MONITORING WELL DETAIL
SCALE: N.T.S.

ASE
Andrews Survey & Engineering, Inc.
Land Surveying - Civil Engineering - Site Planning
P.O. Box 312, 104 Mendon Street
Uxbridge, Massachusetts 01569
P: 508-278-3897 F: 508-278-2289
500 East Washington Street
North Attleboro, Massachusetts 02760
P: 508-316-0452 F: 508-316-0963

PROJECT: LAKELAND FARMS TOWNHOUSE COMMUNITY 84 CLEVELAND STREET NORFOLK, MA 02056

APPLICANT: LAKELAND FARMS, LLC 84 CLEVELAND STREET NORFOLK, MA 02056

REVISIONS

NO.	DATE	DESCRIPTION

CAD FILE	.\dwg\2014-111_SP.dwg
DRAWN BY	SJO, TRB
CHECKED BY	PBH, BJA
DATE	APRIL 19, 2016
PROJECT NO.	2014-111

SHEET TITLE

CONSTRUCTION DETAILS

SHEET 6 OF 6

COMMONWEALTH OF MASSACHUSETTS PAUL B. HUTNAK CIVIL No. 45872 REGISTERED PROFESSIONAL ENGINEER 4-19-16

DRAWING NO.

C-7.6

PLAN NO. L-4819

2016 © COPYRIGHT ANDREWS SURVEY & ENGINEERING, INC.