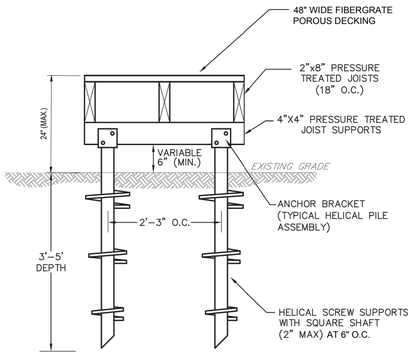

Profile View

USING HELICAL SCREW SUPPORTS

BOARDWALK SCHEMATIC DETAIL

SCALE: N.T.S

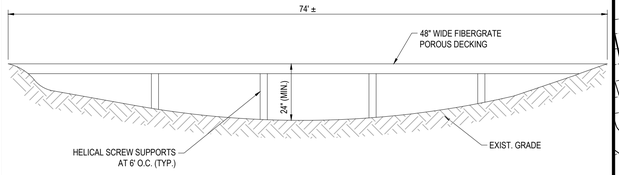

BOARDWALK CROSS SECTION SCHEMATIC

SCALE: N.T.S

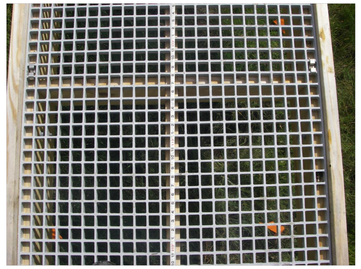

Potential boardwalk crossing, looking north

Potential boardwalk crossing, looking south

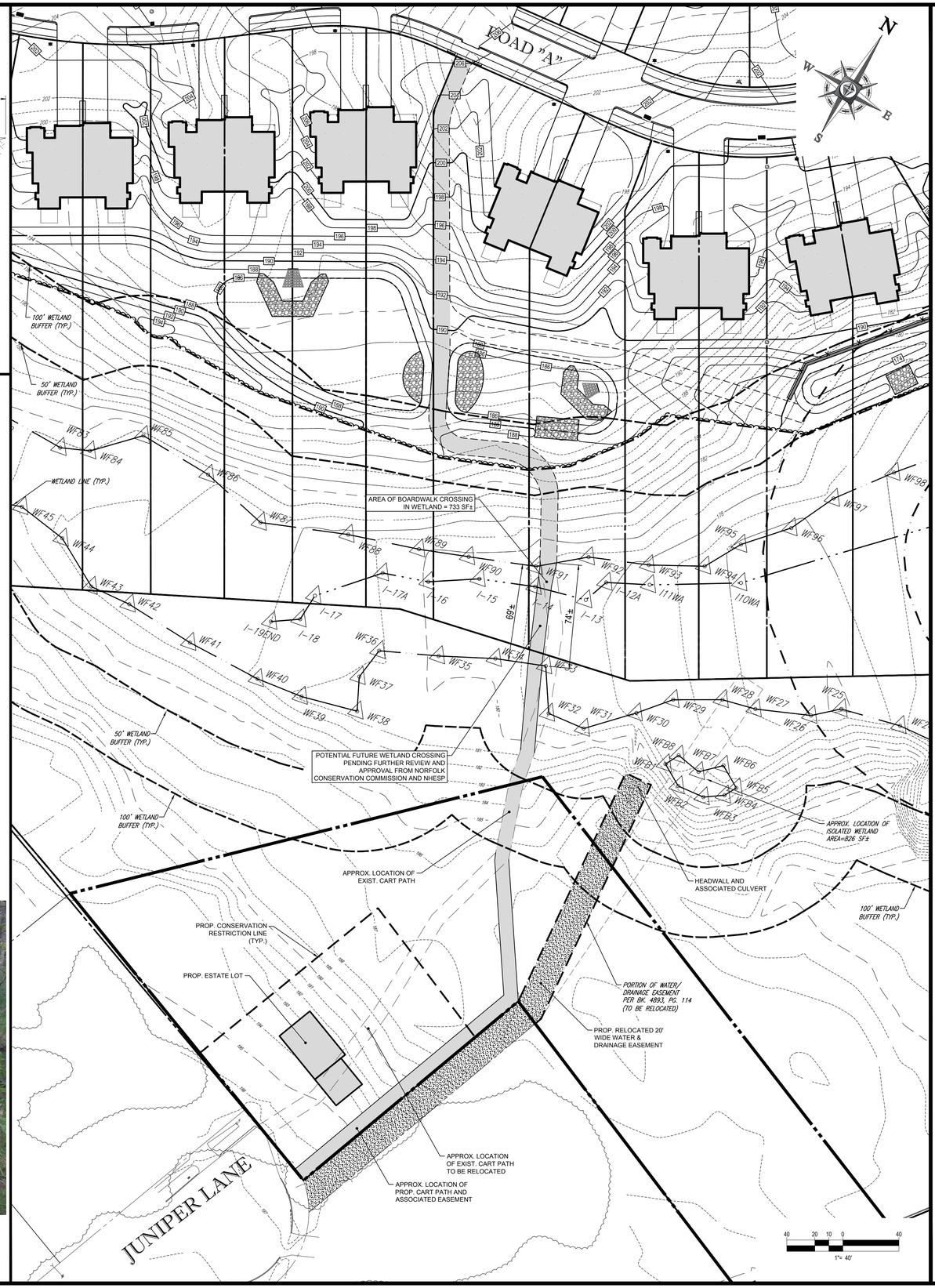

BOHLER ENGINEERING

SITE CIVIL AND CONSULTING ENGINEERING
LAND SURVEYING
SITE DESIGN
PROGRAM MANAGEMENT
LANDSCAPE ARCHITECTURE
TECHNOLOGY SERVICES

- UPSTATE NEW YORK
- NEW ENGLAND
- NEW YORK CITY
- NEW YORK METRO
- NEW JERSEY
- LEHIGH VALLEY, PA
- SCRANTON/WILKES-BARRE, PA
- SOUTHEASTERN, PA
- PHILADELPHIA, PA
- RALEIGH, NC
- CHARLOTTE, NC
- ATLANTA, GA
- TAMPA, FL
- ORLANDO, FL
- SOUTH FLORIDA
- DALLAS, TX
- BALTIMORE, MD
- WASHINGTON, DC AND NORTHERN VIRGINIA
- CENTRAL VIRGINIA

THIS DRAWING IS THE PROPERTY OF BOHLER ENGINEERING. ALL RIGHTS RESERVED. DO NOT SCALE DRAWINGS. USE ONLY THE DIMENSIONS SHOWN. REPORT ANY ERRORS, OMISSIONS AND FIELD CONDITIONS TO THE ENGINEER IMMEDIATELY. ALL PLANS AND DOCUMENTS ARE TO BE SIGNED AND SEALED BEFORE RELIANCE.

REVISIONS

REV	DATE	COMMENT	BY
1	03/18/19	REVS PER CONS-COM COMMENTS	CFD
2			
3			
4			
5			
6			
7			
8			
9			
10			
11			
12			
13			
14			
15			

PROJECT No.:	W131097
DRAWN BY:	CFD
CHECKED BY:	RMM
DATE:	02/26/2019
SCALE:	AS NOTED
CAD I.D.:	W131097_SS11

PROJECT:

PRELIMINARY PLAN
FOR
COMPREHENSIVE PERMIT
"THE ENCLAVE AT NORFOLK"
A SUBDIVISION IN NORFOLK, MASS.

OWNER: NORFOLK HOLDINGS, LLC

VILLAGE GREEN
TOWN OF NORFOLK
NORFOLK COUNTY, MASS.
MAP #15, LOT #54-87

BOHLER ENGINEERING
352 TURNPIKE ROAD
SOUTHBOROUGH, MA 01772
Phone: (508) 480-9900
Fax: (508) 480-9080
www.BohlerEngineering.com

J.G. SWERLING

SHEET TITLE:

WETLAND CROSSING EXHIBIT

SHEET NUMBER:

1

REV 1 - 03/18/2019

P:\131097\DWG\W131097_ss11.dwg, Wetland Crossing Exhibit, 4/23/2019, 10:17:14 AM, cdescoto, AutoCAD PDF (General Documentation).pc3, Previous paper size (24.00 x 36.00 inches), 1:1