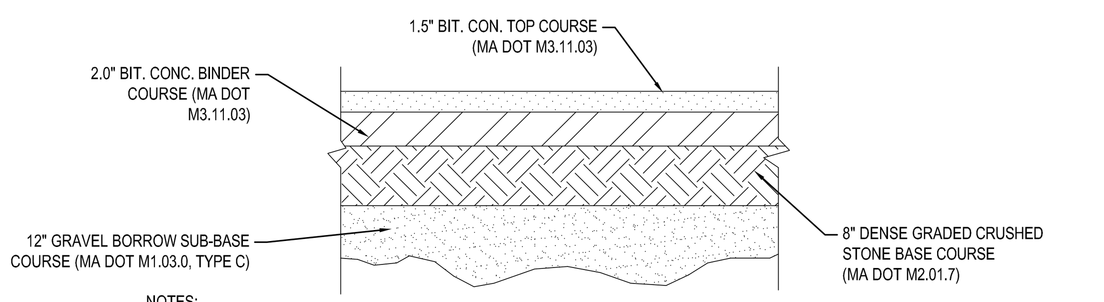

NOTES:
1. PAVEMENT BASE AND SUBBASE COURSES TO CONFORM TO ALL MASSDOT HIGHWAY DIVISION SPECIFICATIONS.
2. IF SUBGRADES ARE WET, AN ADDITIONAL 6"+ LAYER OF $\frac{3}{8}$" CRUSHED STONE MAY BE REQUIRED TO PROVIDE STABILITY FOR EQUIPMENT.

TYPICAL PAVEMENT SECTION

N.T.S.

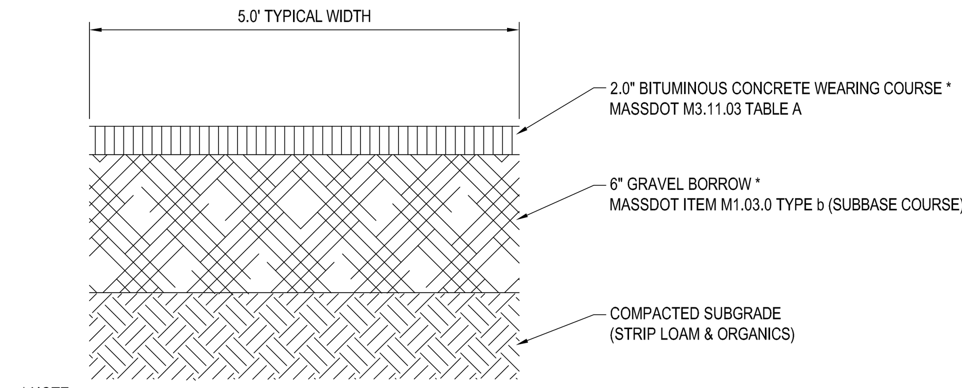

* NOTE:
UTILIZE 4" POROUS BITUMINOUS ASPHALT OVER 8" COMPACTED CHOLAR COURSE (AASHTO NO. 57) FOR ANY NECESSARY SIDEWALK REPLACEMENT ALONG LEGACY FARMS ROAD.

BITUMINOUS CONCRETE SIDEWALK SECTION

N.T.S.

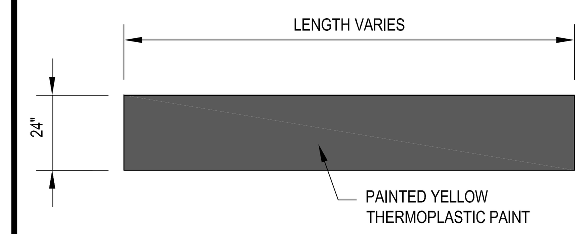

'STOP' BAR DETAIL

N.T.S.

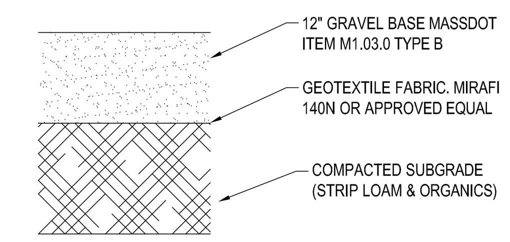

SEPTIC SYSTEM ACCESS DRIVE

N.T.S.

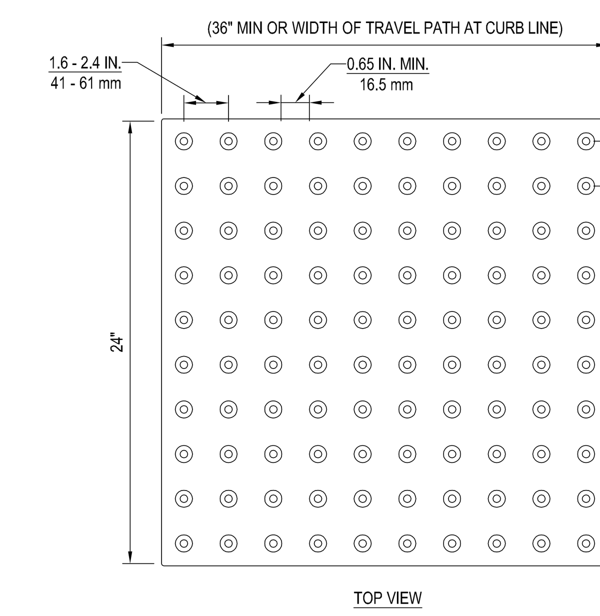

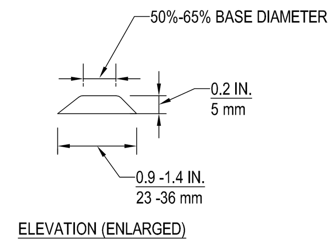

NOTE:
1. TRUNCATED DOME SHALL CONTRAST VISUALLY WITH ADJOINING SURFACES, EITHER LIGHT ON DARK OR DARK ON LIGHT.
2. CONTRACTOR TO INSTALL DETECTABLE WARNINGS WHEN SIDEWALK INTERSECTS A HAZARDOUS VEHICULAR AREA.
3. DOMES SHALL HAVE A BASE DIAMETER OF 0.9 IN (23 mm) MIN. TO 1.4 IN (36 mm) MAX, AND A TOP DIA. OF 50% TO 65% MAX. OF THE BASE DIA.
4. TRUNCATED DOMES SHALL HAVE A HEIGHT OF 0.2" (5.1 mm).
5. TRUNCATED DOMES SHALL HAVE A CENTER TO CENTER SPACING OF 1.6 IN (41 mm) MIN. AND 2.4 IN. (61 mm) MAX. AND A BASE TO BASE SPACING OF 0.65 IN. (16.5 mm) MIN., MEASURED BETWEEN THE MOST ADJACENT DOMES ON THE GRID.

NOTE TO DESIGNER:
IF A WALK CROSSES OR ADJOINS A VEHICULAR WAY WHERE THE WALKING SURFACE AND PAVEMENT ARE NOT SEPARATED BY CURBS, RAILING OR OTHER ELEMENTS, THE BOUNDARY BETWEEN THE AREA SHALL BE DEFINED BY A CONTINUOUS DETECTABLE WARNING WHICH IS MIN. 36" WIDE (ADA ACCESSIBLE GUIDELINES PRINTED 11-4-06) AND MIN. 24" DEPTH.

DETECTABLE WARNING PANEL DETAIL (IF REQUIRED)

N.T.S.

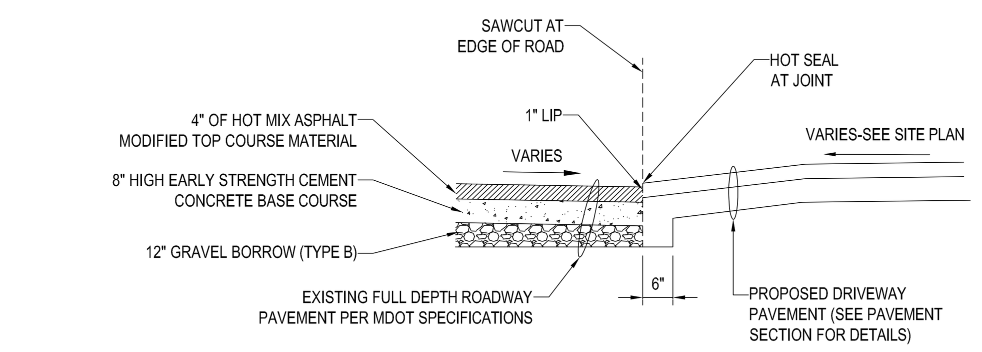

DRIVEWAY CONSTRUCTION DETAIL

N.T.S.

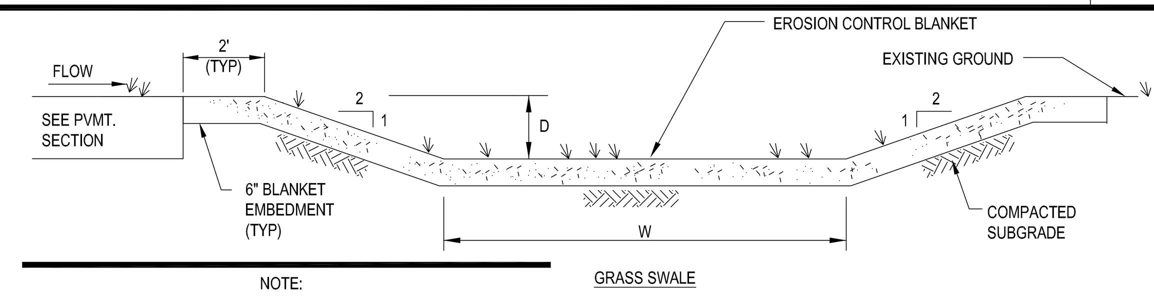

NOTE:

1. GEOTECHNICAL FABRIC TO BE INSTALLED FOR SLOPE STABILIZATION WHERE SLOPES EXCEED 4%.
2. SEED MIX FOR GRASSED SWALES SHALL CONSIST OF THE FOLLOWING:
   70% RED FESCUE
   15% PERENNIAL RYE GRASS
   15% BIRDS FOOT TREFOIL

SWALE DESIGNATION	W	D
TYPICAL *	2'	2'

* UNLESS OTHERWISE NOTED ON GRADING PLANS

GRASSED SWALE DETAIL

N.T.S.

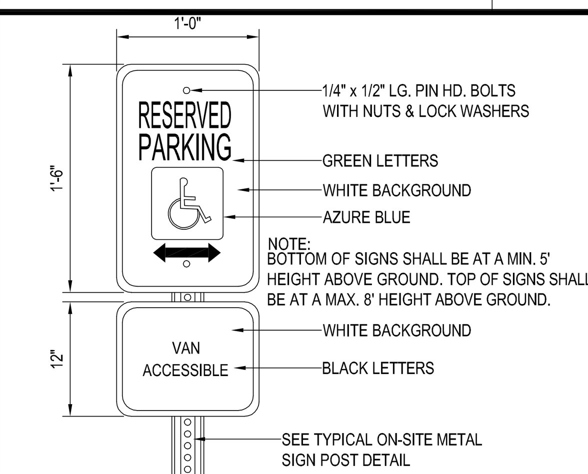

NOTE:
BOTTOM OF SIGNS SHALL BE AT A MIN. 5' HEIGHT ABOVE GROUND. TOP OF SIGNS SHALL BE AT A MAX. 8' HEIGHT ABOVE GROUND.

ACCESSIBLE PARKING SIGN

N.T.S.

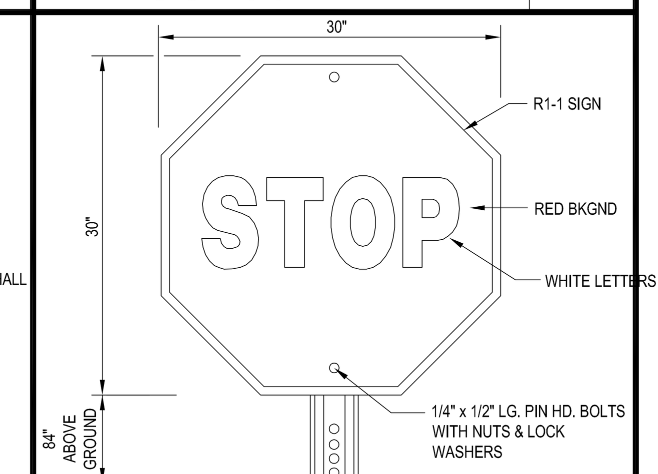

'STOP' SIGN DETAIL

N.T.S.

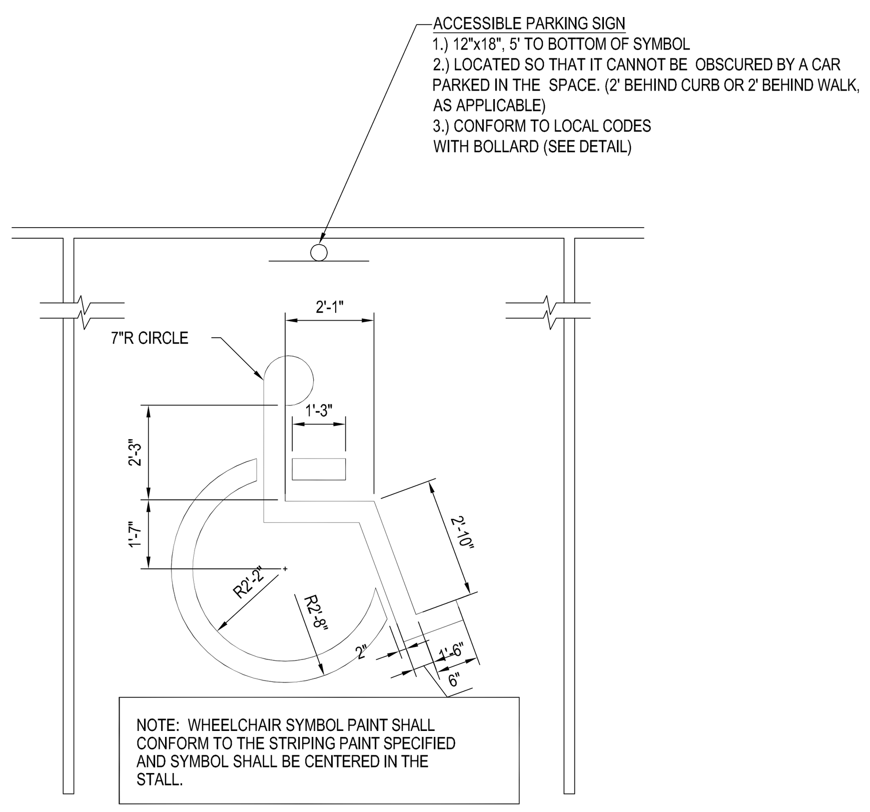

NOTE: WHEELCHAIR SYMBOL PAINT SHALL CONFORM TO THE STRIPING PAINT SPECIFIED AND SYMBOL SHALL BE CENTERED IN THE STALL.

ACCESSIBLE PARKING STALL PAINTING DETAIL

N.T.S.

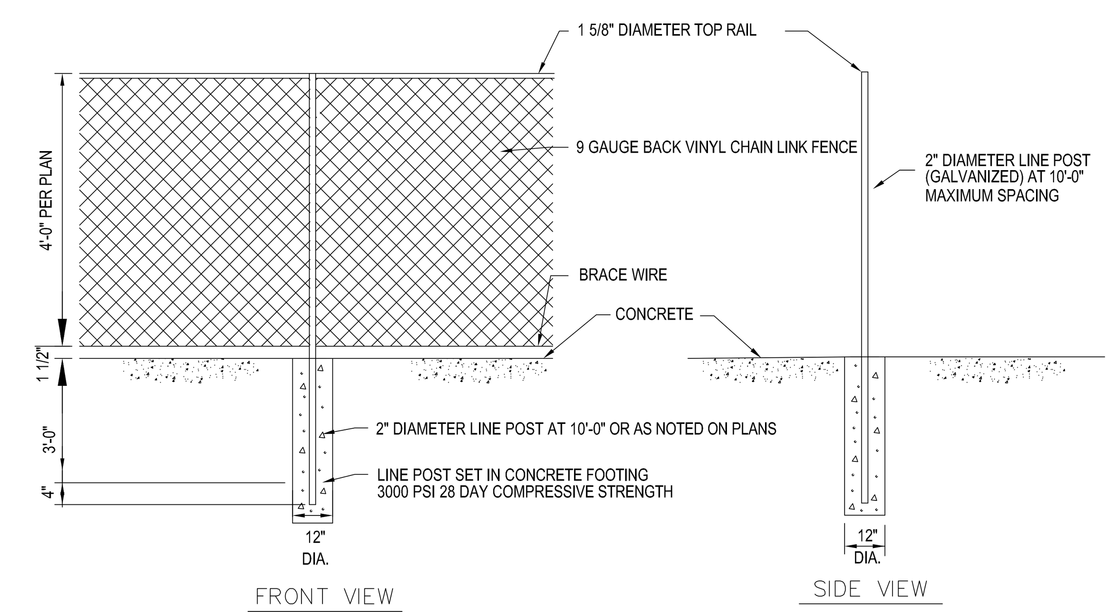

CHAIN LINK FENCE DETAIL

N.T.S.

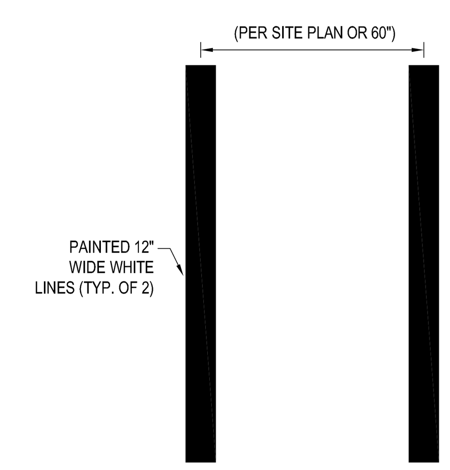

CROSSWALK DETAIL

N.T.S.

BLACK LEGEND ON YELLOW BACKGROUND (W11A-2) (W11A-2P)

"PEDESTRIAN CROSSING" SIGN

N.T.S.

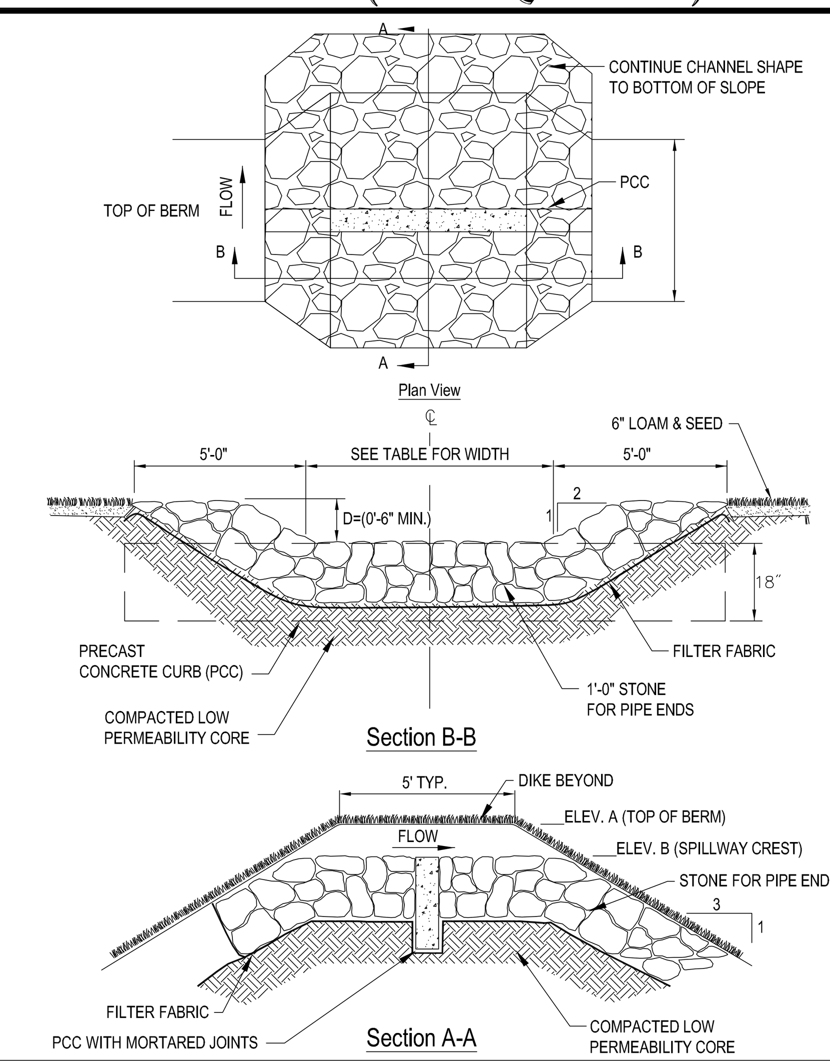

OVERFLOW SPILLWAY

N.T.S.

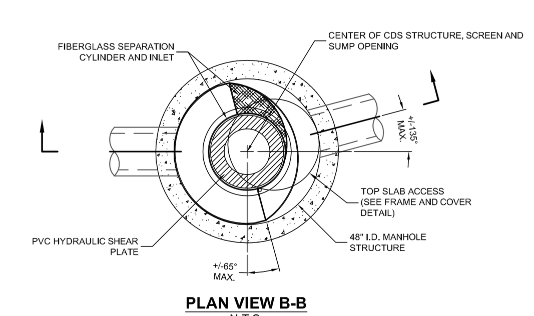

PLAN VIEW B-B
N.T.S.

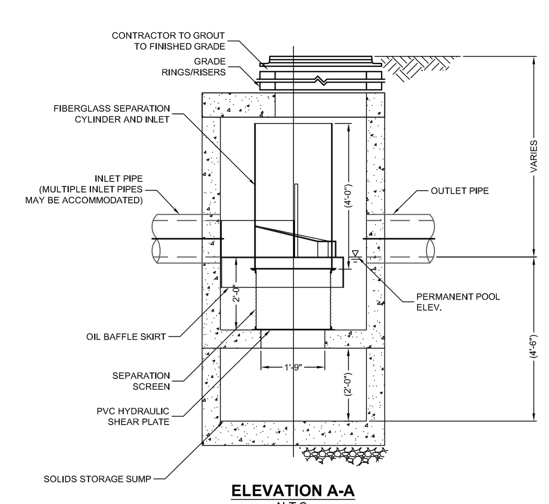

ELEVATION A-A
N.T.S.

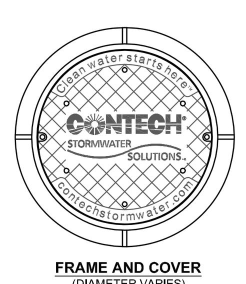

FRAME AND COVER
(DIAMETER VARIES)
N.T.S.

DESIGN NOTES
RATED TREATMENT CAPACITY IS 1.4 CFS, OR PER LOCAL REGULATIONS. THE STANDARD CONFIGURATION IS SHOWN. ALTERNATE CONFIGURATIONS ARE AVAILABLE AND ARE LISTED BELOW. SOME CONFIGURATIONS MAY BE COMBINED TO SUIT SITE REQUIREMENTS.
CONFIGURATION DESCRIPTION
GRATED INLET ONLY (NO INLET PIPE)
GRATED INLET WITH INLET PIPE OR PIPES
CURB INLET ONLY (NO INLET PIPE)
CURB INLET WITH INLET PIPE OR PIPES

GENERAL NOTES
1. CONTECH TO PROVIDE ALL MATERIALS UNLESS NOTED OTHERWISE.
2. DIMENSIONS MARKED WITH ( ) ARE REFERENCE DIMENSIONS. ACTUAL DIMENSIONS MAY VARY.
3. FOR FABRICATION DRAWINGS WITH DETAILED STRUCTURE DIMENSIONS AND WEIGHTS, PLEASE CONTACT YOUR CONTECH CONSTRUCTION PRODUCTS REPRESENTATIVE. www.contech-cpi.com
4. CDS WATER QUALITY STRUCTURE SHALL BE IN ACCORDANCE WITH ALL DESIGN DATA AND INFORMATION CONTAINED IN THIS DRAWING.
5. STRUCTURE SHALL MEET AASHTO HS20 AND CASTINGS SHALL MEET AASHTO M306 LOAD RATING, ASSUMING GROUNDWATER ELEVATION AT, OR BELOW, THE OUTLET PIPE INVERT ELEVATION. ENGINEER OF RECORD TO CONFIRM ACTUAL GROUNDWATER ELEVATION.
6. PVC HYDRAULIC SHEAR PLATE IS PLACED ON SHELF AT BOTTOM OF SCREEN CYLINDER. REMOVE AND REPLACE AS NECESSARY DURING MAINTENANCE CLEANING.

INSTALLATION NOTES
1. ANY SUB-BASE, BACKFILL DEPTH, AND/OR ANTI-FLOTATION PROVISIONS ARE SITE-SPECIFIC DESIGN CONSIDERATIONS AND SHALL BE SPECIFIED BY ENGINEER OF RECORD.
2. CONTRACTOR TO PROVIDE EQUIPMENT WITH SUFFICIENT LIFTING AND REACH CAPACITY TO LIFT AND SET THE CDS MANHOLE STRUCTURE (LIFTING CLUTCHES PROVIDED).
3. CONTRACTOR TO ADD JOINT SEALANT BETWEEN ALL STRUCTURE SECTIONS, AND ASSEMBLE STRUCTURE.
4. CONTRACTOR TO PROVIDE, INSTALL, AND GROUT PIPES. MATCH PIPE INVERTS WITH ELEVATIONS SHOWN.
5. CONTRACTOR TO TAKE APPROPRIATE MEASURES TO ASSURE UNIT IS WATER TIGHT, HOLDING WATER TO FLOWLINE INVERT MINIMUM. IT IS SUGGESTED THAT ALL JOINTS BELOW PIPE INVERTS ARE GROUTED.

SITE SPECIFIC DATA REQUIREMENTS

STRUCTURE ID			
WATER QUALITY FLOW RATE (CFS)			
PEAK FLOW RATE (CFS)			
RETURN PERIOD OF PEAK FLOW (YRS)			
SCREEN APERTURE (2400 OR 4700)			
PIPE DATA:	I.E.	MATERIAL	DIAMETER
INLET PIPE 1			
INLET PIPE 2			
OUTLET PIPE			
RIM ELEVATION			
ANTI-FLOTATION BALLAST		WIDTH	HEIGHT
NOTES/SPECIAL REQUIREMENTS:			
* PER ENGINEER OF RECORD			

CDS2015-4 CDS DETAIL

N.T.S.

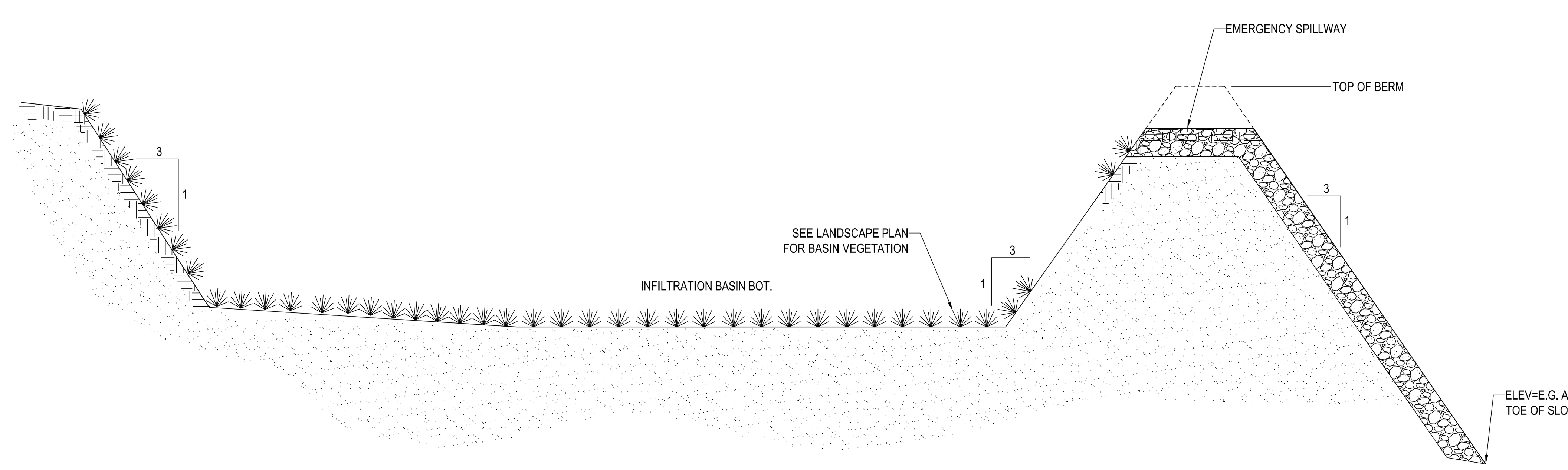

NOTES:
1. CONTRACTOR TO ESTABLISH VEGETATION IN BASIN PRIOR TO PAVING.
2. PARENT MATERIAL & FILL MATERIAL SOILS SHALL NOT BE COMPACTED TO REDUCE INFILTRATION CAPACITY. IF SOILS WITHIN THE FOOTPRINT OF THE INFILTRATION BASIN ARE COMPACTED, COMPACTED SOILS SHALL BE REMOVED AND REPLACED.

TYPICAL DETENTION/INFILTRATION BASIN SECTION

N.T.S.

BOHLER ENGINEERING™
SITE CIVIL AND CONSULTING ENGINEERING
LAND SURVEYING · PROGRAM MANAGEMENT · LANDSCAPE ARCHITECTURE
SUSTAINABLE DESIGN · PERMITTING SERVICES · TRANSPORTATION SERVICES
UPSTATE NEW YORK · NEW ENGLAND · BOSTON, MA · NEW YORK METRO · NEW YORK, NY · NEW JERSEY · PHILADELPHIA, PA · LEHIGH VALLEY, PA · SOUTHEASTERN, PA · REHOBOTH BEACH, DE · BALTIMORE, MD · SOUTHERN MARYLAND · NORTHERN VIRGINIA · CENTRAL VIRGINIA · RALEIGH, NC · CHARLOTTE, NC · ATLANTA, GA · TAMPA, FL · SOUTH FLORIDA · DALLAS, TX

THE INFORMATION, DESIGN AND CONTENT OF THIS PLAN ARE PROPRIETARY AND SHALL NOT BE COPIED OR USED FOR ANY PURPOSE WITHOUT PRIOR WRITTEN AUTHORIZATION FROM BOHLER ENGINEERING. ONLY APPROVED, SIGNED AND SEALED PLANS SHALL BE UTILIZED FOR CONSTRUCTION PURPOSES.
© BOHLER ENGINEERING, 2017

REVISIONS

REV	DATE	COMMENT	BY
1			
2			
3			
4			
5			
6			
7			
8			
9			
10			
11			
12			
13			
14			
15			

PROJECT No.:	W131097
DRAWN BY:	KBS
CHECKED BY:	RMM
DATE:	06/13/2017
SCALE:	AS NOTED
CAD I.D.:	W131097_SS0_2_DETAILS

PROJECT:
PRELIMINARY PLAN
FOR
COMPREHENSIVE PERMIT
"THE ENCLAVE AT NORFOLK"
A SUBDIVISION IN NORFOLK, MASS.
OWNER: NORFOLK HOLDINGS, LLC
VILLAGE GREEN
TOWN OF NORFOLK
NORFOLK COUNTY, MASS.
MAP #15, LOT 54-87

BOHLER ENGINEERING
352 TURNPIKE ROAD
SOUTHBOROUGH, MA 01772
Phone: (508) 480-9900
Fax: (508) 480-9080
www.BohlerEngineering.com

J.G. SWERLING
PROFESSIONAL ENGINEER
MASSACHUSETTS LICENSE No. 41697
NEW HAMPSHIRE LICENSE No. 14695
MAINE LICENSE No. [illegible]
CONNECTICUT LICENSE No. 30785
RHODE ISLAND LICENSE No. 11425
COMMONWEALTH OF MASSACHUSETTS · JOSHUA G. SWERLING · CIVIL · No. 41697 · REGISTERED PROFESSIONAL ENGINEER

SHEET TITLE:
DETAILS

SHEET NUMBER:
C-30

REV 0 - 06/13/2017

P:\13\W131097\DWG\W131097_ss0_2_Details.dwg, 30-DETAILS, 4/23/2010, 10:17:14 AM, cdesocio, XeroX510-1.pc3, User634, 1:1