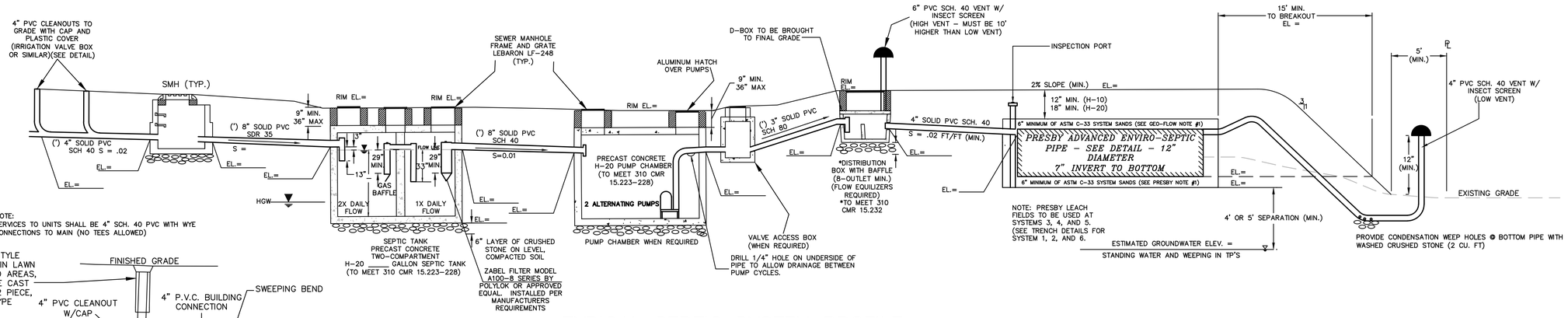

TYPICAL SEPTIC SYSTEM PROFILE

NOT TO SCALE

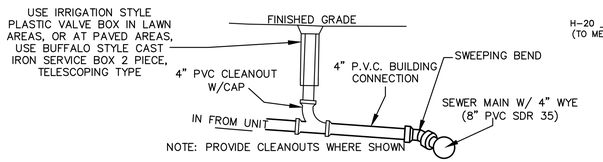

TYPICAL SEWER CONNECTION W/ CLEANOUT

NOT TO SCALE

SEPTIC SYSTEM INVERT SCHEDULE

SYS. #	INV @ SMH	SEPTIC TANK IN	SEPTIC TANK OUT	PUMP CHAMBER IN	PUMP CHAMBER OUT	D-BOX IN	D-BOX OUT	S.A.S END (INV.) IN	S.A.S END (INV.) OUT	S.A.S END (INV.) BOTTOM	FINISH GRADE	TOP S.A.S	BREAKOUT EL.	GW	MAX. GW HEIGHT (FT)
1	196.34	195.69	194.44	–	–	195.27	195.1	195.0	194.75	193.0	196.4	195.35	195.35	187.4 (TP 1-1)	.45
2	–	201.76	201.51	–	–	201.33	201.16	201.09	200.80	198.8	202.5	201.44	201.44	193.8 (TP 3-2)	.99
3	218.33 220.60	217.25 (3A) 218.14 (3B)	217.00 (3A) 218.15 (3B)	–	–	216.95	216.78	216.68	216.68	215.6	218.6	217.6	217.6	209.4 (BOT. HOLE)	.86
4	–	207.84	207.59	–	–	207.55	207.38	207.28	207.78	206.2	209.2	208.2	208.2	200.6 (BOT. HOLE)	1.16
5	–	215.47	215.22	215.17	215.00	216.45	216.28	216.18	216.18	215.1	218.1	217.1	217.1	209.5 (TP 5-2)	1.30
6	–	218.98	218.73	–	–	218.57	218.4	218.3	217.85	216.3	219.7	218.65	218.6	209.3 (TP 8-1)	.52

NOTE:
SYSTEMS #1 AND #3 REQUIRE A MINIMUM OF 5' SEPARATION TO GROUNDWATER DUE TO <2 MPI PERC RATES. ALL OTHER SYSTEMS REQUIRE A MINIMUM OF 4' SEPARATION.

DESIGN CALCULATIONS FOR UNITS #1-4:
SYSTEM#1

1.) ESTIMATED DAILY FLOW:
4 UNITS: 12 BEDROOMS X 110 GPD/BEDROOM = 1320 GPD
(4-3 BEDROOM)

3.) 2'D X 2'W TRENCHES REQUIRED: <2 MPI (CLASS I)
1320 GPD / 0.74 = 1784 S.F. / 6 S.F./L.F. = 298 L.F.
USE (6) 2'D X 2'W X 50'L TRENCHES = 300 L.F.

DESIGN CALCULATIONS FOR UNITS #5-7:
SYSTEM #2

1.) ESTIMATED DAILY FLOW:
3 UNITS: 7 BEDROOMS X 110 GPD/BEDROOM = 770 GPD
(1-3 BEDROOM AND 2-2 BEDROOM)

2.) REQUIRED SEPTIC TANK CAPACITY: (PER TITLE 5)
TWO TANKS IN SERIES (OR TWO COMPARTMENT TANK):
FIRST COMPARTMENT = 48 HOUR DETENTION X 770 GPD = 1540 GAL. (MIN)
SECOND COMPARTMENT = 24 HOUR DETENTION X 770 GPD = 770 GAL
SEPTIC TANK SIZE PROVIDED (2-COMPARTMENT TANK) = 2,500 GAL

3.) 2'D X 2'W TRENCHES REQUIRED: 14 MPI (CLASS II)
770 GPD / 0.56 = 1375 S.F. / 6. S.F./L.F. = 229 L.F.
USE (4) 2'D X 2'W X 58'L TRENCHES =231 L.F.

DESIGN CALCULATIONS FOR UNITS #21-28:
SYSTEM #3

1.) ESTIMATED DAILY FLOW:
10 UNITS: 27 BEDROOMS X 110 GPD/BEDROOM = 2,970 GPD
(7 X 3 BEDROOM AND 3 X 2 BEDROOM)

2.) REQUIRED SEPTIC TANK CAPACITY: (PER TITLE 5)
TWO TANKS IN SERIES (OR TWO COMPARTMENT TANK):
FIRST COMPARTMENT = 48 HOUR DETENTION X 2970 GPD = 5,940 GAL
SECOND COMPARTMENT = 24 HOUR DETENTION X 2,970 GPD = 2,970 GAL
SEPTIC TANK SIZE PROVIDED (2-COMPARTMENT TANK) = 9,000 GAL

3.) PRESBY ADVANCED ENVIRO-SEPTIC SYSTEM LEACHING REQUIREMENTS:
USE <2 M.P.I. PERCOLATION RATE (CLASS I)
EFFLUENT LOADING RATE = 0.74 GPD/SF
PER TITLE V, AREA REQUIRED= 2,970 GPD/ 0.74 GPD/SF = 4013 SF
**USING PRESBY ENVIRO-SEPTIC SYSTEM, EMPLOY 40% REDUCTION TO LEACHING SYSTEM AREA: 4013 SF X 0.6 = 2,408 S.F.
(2,426 S.F. MIN. REQUIRED PER PRESBY DESIGN MANUAL)
USE (1) 103'L X 25'W LEACHING BEDS = 2,575 S.F.

RESERVE: 4013 S.F REQUIRED
USE LEACHING FIELD TRENCHES
2'D X 2'W TRENCHES = 6 S.F/L.F OF LEACHING AREA
4013 S.F/ 6 = 669 L.F OF TRENCHES REQUIRED
USE (7) 2'D X 2'W X 100'L TRENCHES = 700 L.F.

4.) PRESBY ADVANCED ENVIRO-SEPTIC PIPE REQUIREMENTS:
FOR A PERC RATE OF 1-60 MPI:
NEED 100 LF OF PRESBY AES SEPTIC PIPE FOR EACH 2 BEDROOMS
100 L.F. PER 2 BEDROOMS X 27 BEDROOMS = 1350 LF OF AES PIPE REQ'D
USE (14) 100' LENGTHS OF PIPE SPACED @ 1.5' O.C
WITH 2.25' OF SAND ON SIDES AND 1.5' OF SAND AT ENDS

DESIGN CALCULATIONS FOR UNITS 12-17:
SYSTEM #4

1.) ESTIMATED DAILY FLOW:
6 UNITS: 14 BEDROOMS X 110 GPD/BEDROOM = 1,540 GPD
(2 X 3 BEDROOMS AND 4 X 2 BEDROOM)

2.) REQUIRED SEPTIC TANK CAPACITY: (PER TITLE 5)
TWO TANKS IN SERIES (OR TWO COMPARTMENT TANK):
FIRST COMPARTMENT = 48 HOUR DETENTION X 1,540 GPD = 3,080 GAL
SECOND COMPARTMENT = 24 HOUR DETENTION X 1,540 GPD = 1,540 GAL
SEPTIC TANK SIZE PROVIDED (2-COMPARTMENT TANK) = 5,000 GAL

3.) PRESBY ENVIRO-SEPTIC SYSTEM LEACHING REQUIREMENTS:
USE 6 M.P.I. PERCOLATION RATE (CLASS II)
EFFLUENT LOADING RATE = 0.60 GPD/SF
PER TITLE V, AREA REQUIRED= 1,540 GPD / 0.60 GPD/SF = 2,567 S.F.
**USING ADVANCED PRESBY ENVIRO-SEPTIC SYSTEM, EMPLOY 40% REDUCTION TO LEACHING SYSTEM AREA: 2,567 S.F. X 0.6 = 1,540 S.F.
USE (1) 92'L X 17'W LEACHING BEDS = 1,564 S.F.

RESERVE: 1,540 S.F REQUIRED
USE LEACHING FIELD TRENCHES
2'D X 2'W TRENCHES = 6 S.F./L.F OF LEACHING AREA
2,567 S.F /6 = 428 L.F OF TRENCHES REQUIRED
USE (6) 2'D X 2'W X 72'L TRENCHES = 432 L.F.

4.) PRESBY ADVANCED ENVIRO-SEPTIC PIPE REQUIREMENTS:
FOR A PERC RATE OF 1-60 MPI:
NEED 100 L.F. OF PRESBY AES SEPTIC PIPE FOR EACH 2 BEDROOMS
100 L.F. PER 2 BEDROOMS X 14 BEDROOMS = 700 LF OF AES PIPE REQ'D.
USE (8) 90' LENGTHS OF PIPE SPACED @ 2.0' O.C
WITH 1.0' OF SAND ALL AROUND.

DESIGN CALCULATIONS FOR UNITS #8-11, #18-20:
SYSTEM #5

1.) ESTIMATED DAILY FLOW:
7 UNITS: 20 BEDROOMS X 110 GPD/BEDROOM = 2,200 GPD
(6 X 3 BEDROOMS AND 1 X 2 BEDROOM)

2.) REQUIRED SEPTIC TANK CAPACITY: (PER TITLE 5)
TWO TANKS IN SERIES (OR TWO COMPARTMENT TANK):
FOR UNITS #8-11 (12 BEDROOMS):
FIRST COMPARTMENT = 48 HOUR DETENTION X 1320 GPD = 2640 GAL
SECOND COMPARTMENT = 24 HOUR DETENTION X 1320 GPD = 1320 GAL
SEPTIC TANK SIZE PROVIDED (2-COMPARTMENT TANK) = 4,000 GAL
FOR UNITS #18-20 (8 BEDROOMS):
FIRST COMPARTMENT = 48 HOUR DETENTION X 880 GPD = 1,760 GAL
SECOND COMPARTMENT = 24 HOUR DETENTION X 880 GPD = 880 GAL
SEPTIC TANK SIZE PROVIDED (2-COMPARTMENT TANK) = 3,000 GAL

3.) PRESBY ADVANCED ENVIRO-SEPTIC SYSTEM LEACHING REQUIREMENTS:
USE 3 M.P.I. PERCOLATION RATE (CLASS II)
EFFLUENT LOADING RATE = 0.60 GPD/SF
PER TITLE V, AREA REQUIRED= 2,200 GPD / 0.60 GPD/SF = 3,667 SF
**USING PRESBY ADVANCED ENVIRO-SEPTIC SYSTEM, EMPLOY 40% REDUCTION TO LEACHING SYSTEM AREA: 3,667 SF X 0.6 = 2,200 S.F.
(2,310 S.F. MIN. REQUIRED PER PRESBY DESIGN MANUAL)
USE (1) 83' X 28.5' LEACHING BED = 2,365 S.F.

RESERVE: 3,667 S.F REQUIRED
USE LEACHING FIELD TRENCHES
2'D X 2'W TRENCHES = 6 S.F./L.F. OF LEACHING AREA
3,667 S.F/ 6 = 612 L.F OF TRENCHES REQUIRED
USE (7) 2'D X 2'W X 90'L TRENCHES = 630 L.F.

4.) PRESBY ADVANCED ENVIRO-SEPTIC PIPE REQUIREMENTS:
FOR A PERC RATE OF 1-60 MPI:
NEED 100 LF OF PRESBY AES SEPTIC PIPE FOR EACH 2 BEDROOMS
100 L.F. PER 2 BEDROOMS X 20 BEDROOMS = 1000 LF OF AES PIPE REQ'D
USE (15) 80' LENGTHS OF PIPE SPACED @ 1.75' O.C = 1200 LF PROVIDED.
WITH 1.5' OF SAND ALL AROUND

DESIGN CALCULATIONS FOR UNITS #29-32:
SYSTEM #6

1.) ESTIMATED DAILY FLOW:
3 UNITS: 7 BEDROOMS X 110 GPD/BEDROOM = 770 GPD
(1-3 BEDROOM AND 2-2 BEDROOMS)

3.) 2'D X 2'W TRENCHES REQUIRED: <5 MPI (CLASS I)
770 GPD / 0.74 = 1041 S.F. / 6 S.F./L.F. = 173 L.F.
USE (3) 2'D X 2'W X 60'L TRENCHES = 180 L.F.

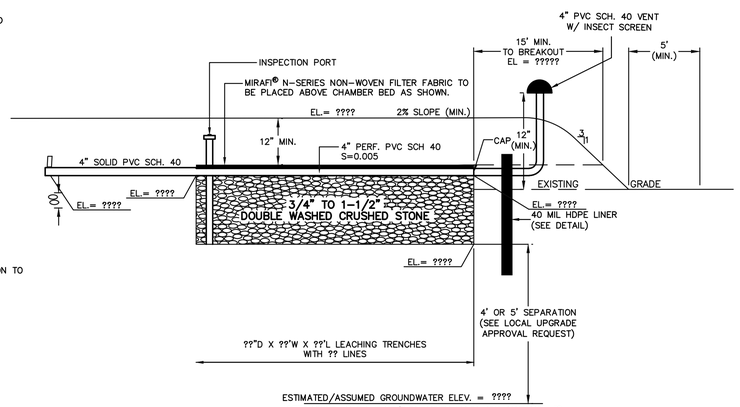

TYPICAL TRENCH PROFILE

NOT TO SCALE

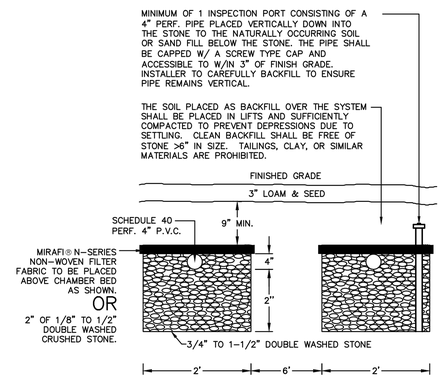

TYPICAL LEACHING TRENCHES

NOT TO SCALE

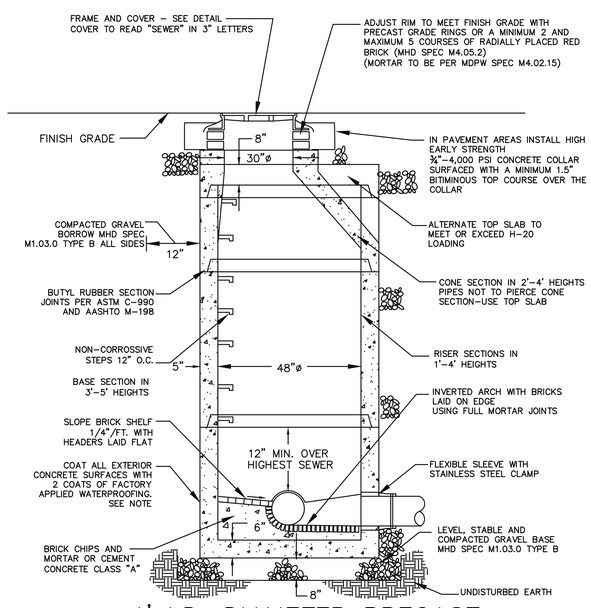

4' I.D. DIAMETER PRECAST CONCRETE SEWER MANHOLE

N.T.S.

NOTES:
1. EXCAVATION TO ALLOW FOR FREE TRAVEL OF COMPACTION EQIPMENT
2. ALL COMPACTION TO A MINIMUM 95 PERCENT DRY DENSITY DETERMINED BY ASTM D1557. SEE SPECIFICATIONS FOR ADDITIONAL REQUIREMENTS
3. ALL PRECAST TO MEET OR EXCEED ASTM C-478 AND ASSHTO M 199 SPECIFICATIONS
4. REINFORCED STEEL TO MEET OR EXCEED ASTM A185 AND H-20 LOADING REQUIREMENTS
5. ALL PRECAST CONCRETE TO BE 4,000 PSI MIMIMUM AND MEET ASTM C-478 (6.1)

REVISIONS

1	5/11/17	BETA ENG./TOWN COMMENTS
2	6/16/17	GENERAL
3	8.14.17	GENERAL

APPLICANT

THE VILLAGE AT NORFOLK, LLC
32 NORFOLK AVENUE
S. EASTON, MA 02375

OWNERS

PAUL AND PATRICIA KELLEY
25 ROCKWOOD ROAD
NORFOLK, MA 02056
ASSESSORS MAP 14 BLOCK 49
LOT 11
DEED BOOK 11286 PAGE 26

DETAILS SHEET FOR "THE VILLAGE AT NORFOLK"

IN NORFOLK MASSACHUSETTS

Outback Engineering Incorporated
165 EAST GROVE STREET
MIDDLEBOROUGH, MA 02346
TEL: (508)-946-9231
FAX: (508)-947-8873
www.outback-eng.com

DATE: FEBRUARY 21, 2017
DRAWN BY: CJV | CHECKED BY: J.A.P.
SCALE: NTS | SHEET 8 OF 10

OE-3012