Town of Norfolk
Basement Conversion to Habitable Space

The Massachusetts State Building Code has specific requirements in order to complete a Basement Conversion/Remodel. Please follow this guide to ensure that you have included all necessary information and documentation before applying for your permit.

Required Documents for a Basement Conversion

Important: The following documents are required as part of your permit application. Please gather the following documentation, and once all documents are prepared, you will upload it to your permit application. Your permit application will not be considered complete until the Norfolk Building Department has all of the required information.

1. Workers Compensation Affidavit
2. Floor Plans/Building Plans with Specifications (See below for details)
3. Debris Disposal Form
4. Workers Compensation Insurance Certificate (Contractors Only, Homeowners Excluded)
5. CSL/HIC License (Contractors Only, Homeowners Excluded)
6. Liability Insurance Certificate (Contractors Only, Homeowners Excluded)
7. Signed Contract with the Homeowner (Contractors Only, Homeowners Excluded)

Optional Documents that May Be Required

1. Shop Drawings with Stamped Calculations for Engineered Products
2. Wall Firestopping Detail
3. Window/Door U-Factors

What to Include in your Floor Plan

1. Draw a floor plan with dimensions drawn to scale, showing the layout of the entire basement.
   Label the use of all the rooms. (See detailed examples included in this packet)
2. Show service panel location, smoke detectors, carbon monoxide detectors, lighting, exhaust fans, plumbing modifications, cleanouts, furnace and water heaters.
3. Show emergency escape and rescue opening location; size, type and location of egress windows, egress window wells, and clear dimension of window wells and ladder location if applicable.
4. List all window and door sizes and type, with dimensions of clear opening provided.
5. Identify all modifications to existing structure such as post, girder, headers, floor joist, etc. Indicate finished floor to ceiling height of all spaces, including height of existing and proposed girders, ductwork, and stairway headroom.
6. Show location and method of combustion make-up air.
7. Show method and location of habitable space ventilation.
8. List insulation type and R Values, and clearly show the perimeter of the energy envelope.

Floor Plan for Basement

Stairway Requirements R311.7:
- Landing Dimensions -36" Min
-Headroom Dimensions- 6'8" Min.
-Width Dimensions-36" Min.
-Stairs must meet handrail/guardrail requirements

Plans Must Include the Following:

-Total Square Footage
-Room Designation (ie Laundry, Bedroom)
-Room Dimensions
-Window & Door Sizes and U-Factors
-Method of Space Heating

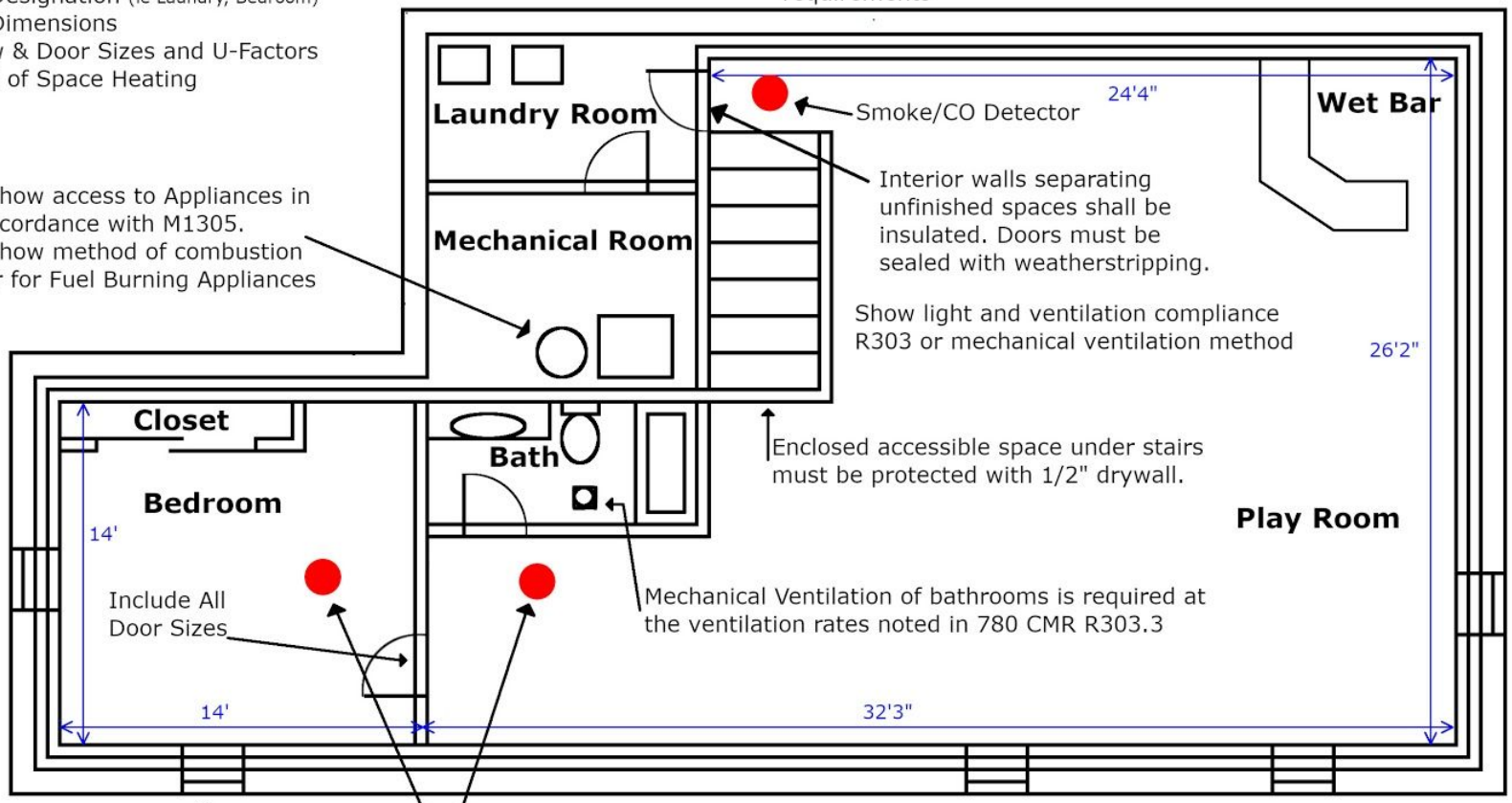

All sleeping rooms must have an emergency escape window. R310

AJ102.3 Smoke, Heat Detection and Carbon Monoxide Alarm Systems: When one or more sleeping rooms are added or created in existing dwellings, the entire existing building shall be provided with smoke detector, heat detector and carbon monoxide detectors designed, located and installed in accordance with the provisions for new construction. 780 CMR

Typical Wall Section

These important construction details must be included with your permit application.

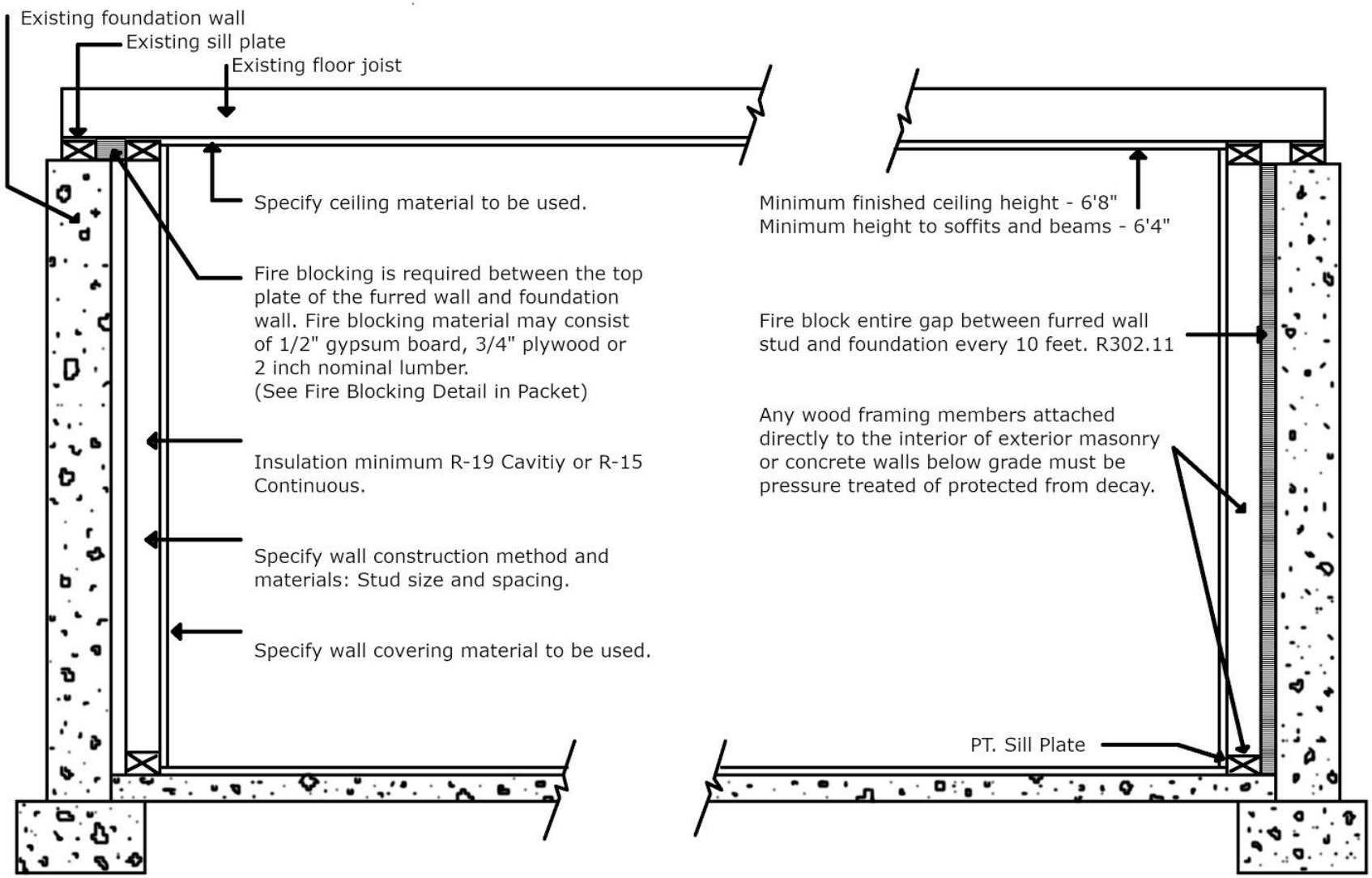

Basement Fire Blocking Detail

Fire Blocking material may be 1/2" gypsum board, 3/4" plywood, 2x nominal lumber.
Mineral Wool is also allowed, but it must be permanently secured in place.

Soffit Detail

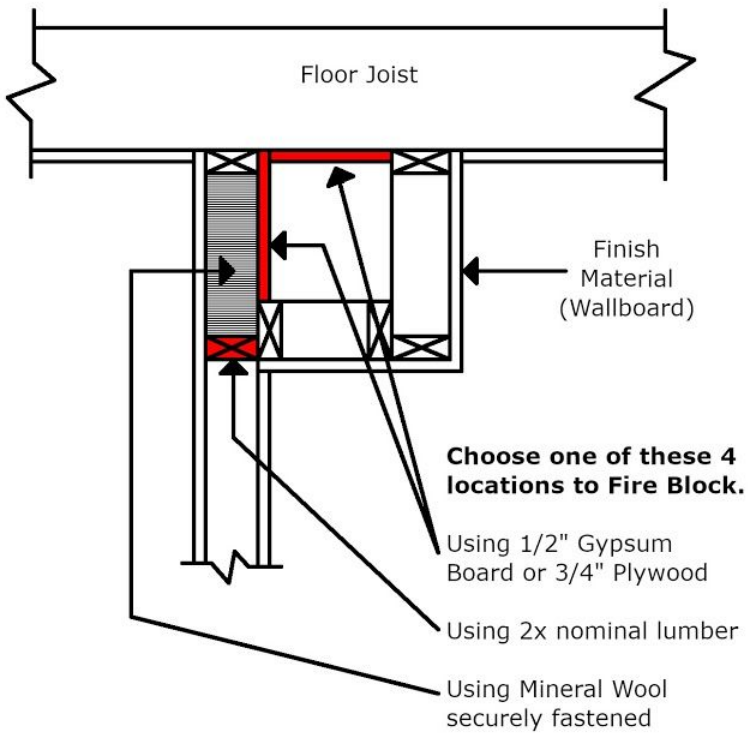

Perimeter Basement Walls

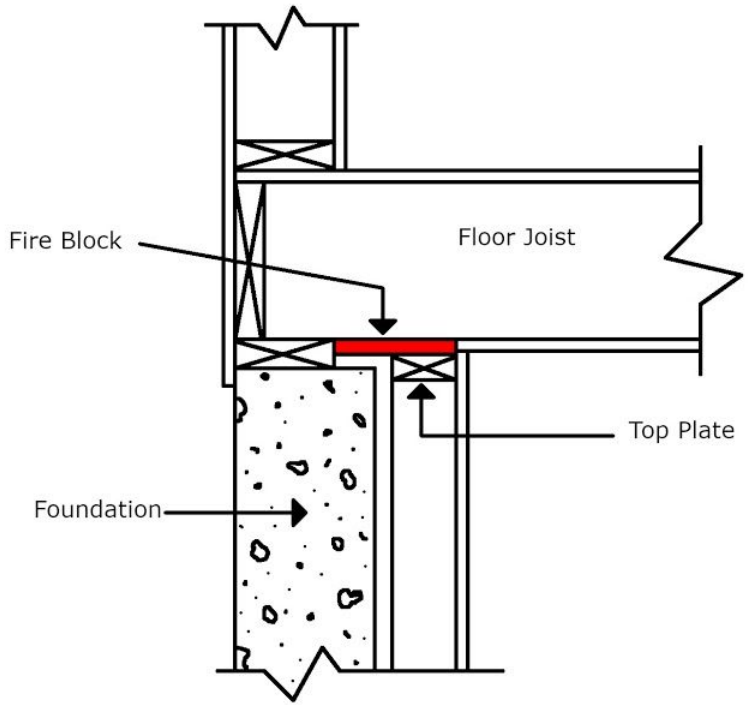

A space behind a 2X4 perimeter basement wall must be separated from the joist bays above.

Important Building Code Regulations Regarding Basements

1. Ceiling Heights Finish floor to finish ceiling shall not be less than 6 feet 8 inches (§R305.1.1) Beams, girders, ducts and other obstructions may project to within 6 foot 4 inches of the finished floor (§R305.1.1) Minimum stairway headroom shall not be less than 6 foot 8 inches measured from the nosing of the stairs (§R311.7.2) A shower or tub equipped with a shower head shall have a minimum ceiling height of 6 feet 8 inches above a minimum area of 30 inches by 30 inches shower pan at the shower head. (§R305)

2. Emergency Escapes All basements and sleeping rooms within a basement shall have an emergency escape window or door located on the exterior of the building so that occupants may escape from that opening directly to the outside without having to travel through the building itself. (§R310) see exception R311.1 for travel through attached garage The door or window shall be operable from the inside without the use of special tools. All escape or rescue windows shall have a minimum clear opening area of 5.7 square feet. Double hung windows only shall be permitted to have a net clear opening of 20 x 24 in either direction. The maximum finished sill height shall be 44 inches above the finished floor. Exterior window areaways (window wells) provided for escape or rescue windows shall be at least 9 square feet and at least 36 inches out from the house. All window wells with a vertical depth of more than 44" shall be equipped with a permanently affixed ladder. (§R310.2) Bulkhead stairs and enclosures serving as the emergency escape shall comply with §R310.1, §R310.3, and §R311.5.8.2

3. Smoke / Carbon Monoxide Detectors Smoke and Carbon Monoxide detectors are required in all basements, locations to be pre-approved by the Littleton Fire Department. (§R314 & R315) If the finished basement contains a sleeping room, a smoke alarm must be installed on the ceiling or wall inside the sleeping room, and in the hallway of area immediately outside the sleeping room. (§R314) When complete renovations occur or when one or more sleeping rooms are added or created in existing dwellings, the entire dwelling shall be equipped with smoke alarms and carbon monoxide detectors in accordance with the provisions for new construction. (§R314.3.1 and §R315, Appendix AJ102.3)

4. Fuel Burning Devices Fossil Fuel Heating devices and water heaters can not be located in a bedroom or bathroom unless specifically approved and labeled for such applications. (IMC §918.6 and IFGC §618.5) All heating devices and water heaters located in space less than required by §6702 are required to be provided with outside combustion air. (IMC §918.6 and IFGC §618.5)

5. Fireblocking Fireblocking shall be provided to cut off all concealed draft openings, both vertically at the ceiling and floor levels and horizontally along the length of the wall at intervals not to exceed 10 feet, and at all interconnections of concealed vertical and horizontal spaces such as intersection of stud walls and soffits or dropped ceilings. A detail of required fireblocking is provided on the following page. (§R302.11)

6. Insulation Show compliance with the provisions of the IECC 2015. Choose compliance option Prescriptive, Performance Path Stretch Code (IECC 2015)

7. Space Under Stairs If access to space under stairs is provided for storage or other uses, the walls and ceiling of this enclosed space must be finished with a minimum 1/2” Gypsum Wallboard.

8. Light And Ventilation All habitable rooms are to be provided with natural light and ventilation by means of exterior glazed openings with an area of not less than (8%) of the floor area or artificial light as approved by the building official. Natural ventilation is required with minimum openable area of (4%) of the floor area being ventilated. For space unable to achieve the minimum required ventilation, a mechanical system in accordance with §R303.1 exception #1 is allowed. (§R303) At least one switch-controlled lighting outlet must be installed at each end of every hallway and stairway. (§5303.6)

9. Stairs All interior stairs shall comply with current edition code. (§R311)

10. Space Heating List method of space heating. Mechanical system installation or alteration will require a separate mechanical permit and inspections.